REDESIGN OF A WIND TURBINE GEARBOX BUSHING JOINT

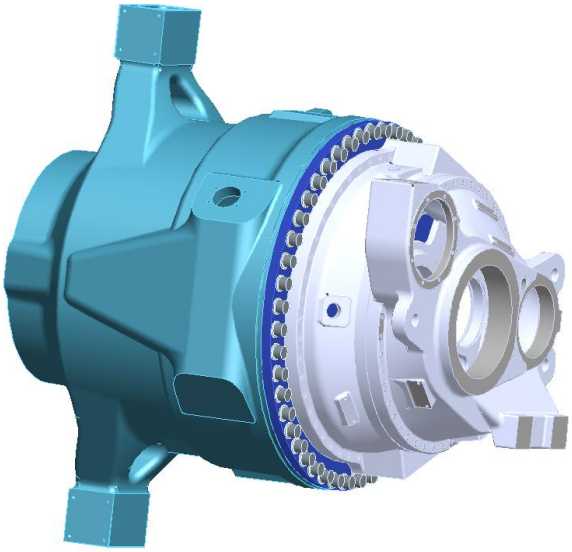

SPRING 2010

STUDENTS

TREVOR COLLINS, MOLLY EBERLY, ANDREW FAIVRE,

ERICK FROEDE, MATTHEW PITSCHMAN

FACULTY ADVISOR/ COMMITTEE MEMBERS

DR. YI WU/ DR. DIPO ONIPEDE, DR. FADI ABU-FARHA

PENNSTATE Erie The Behrend College

INDUSTRIAL SPONSOR

GE TRANSPORTATION SYSTEMS

ANDREW SMITH

imagination at work

Contents

PROPOSAL

BACKGROUND

GE Transportation in Erie, PA produces wind turbine gearboxes for 2.0 MW wind turbines. These gearboxes must transfer power at high torques and low rotational speeds to power at low torque and high rotational speeds. This power conversion operation is necessary for the wind turbine's electric generators to operate efficiently. GE wind turbines are used in over 19 different countries with service lives of 20 years.

The outer housing of the 2.0 MW gearboxes currently consists of three primary components. The first is the input housing, which is a cast component that encases a differential gear set. The second component is the output housing, which is a smaller cast part that encases a high speed parallel gear set. These two housings are connected to the third component, a bolted flange style coupling. This coupling is part of the fixed carrier that restrains and aligns the low speed planetary gears of the differential gear set. Illustrations of the joint are shown in Figures 1 and 2. The joint currently uses 48 bolts to connect the input housing to the fixed carrier. 24 of these bolt holes contain bushings to carry the shear load that the joint experiences. These bushing holes must be match-reamed in order to meet tight design tolerances. Match-reaming is an expensive process, resulting in parts being produced which are unique to each other and non-interchangeable. This means that in the event that an error in this process occurs, both of the match-reamed parts must be scrapped. Also, the bushings are cryo fit into the match reamed holes.

The difficulties associated with installing and uninstalling gearboxes in wind turbines, combined with the possibility of system failure in the event of gearbox malfunction, leads to the requirement that each individual part of the gearbox must last for the entire service life of 20 years.

PROBLEM STATEMENT

The manufacturing costs associated with the production of GE's 2.0 MW wind turbine gearboxes are too high. In order to reduce the cost and improve manufacturability, the redesign of the bolted joint connecting the input housing to the fixed carrier will be investigated. This particular joint has been chosen for redesign because of the high cost associated with the quantity of bushings present and high risk associated with the match reaming process used in the current design.

SPECIFICATIONS

Marketing Spec	Engineering Spec	Rationale for Metric	Metric Evaluation	Constraint/ Goal
1) Connect input housing to the stationary carrier and withstand loads (see figure 1)	**A)** Axial sliding between the stationary carrier and input housing must be 0 deg. with a safety factor of 1.5	There can be no sliding at the joint interface	Hand Calculations to verify that static friction in not overcome at any point along the joint	Constraint (function)
	B) Planar sliding of the input housing rel. to the stationary carrier (perpendicular to the axis of rotation) must be 0 m with a safety factor of 1.5	There can be no sliding at the joint interface	Hand Calculations to verify that static friction in not overcome at any point along the joint	Constraint (function)
	C) The separation of the joint at an axial load of 156kN is 0 m	Separation of the joint would interfere with the operation of internal components and cause fluid leaks	ANSYS simulation of joint configuration and loading to determine axial displacement & deformation	Constraint (function)
	D) The design must not fail due to fatigue (tensile, moment, and shear loads resulting from an operating toque of 1400 -1900 kNm) as per IEC AE88 duty cycle requirements	This is the rated torque according to "GE drive train technology"	Fatigue calculations based on mean and alternating stress values from ANSYS simulations	Constraint (sustainability)
	E) The joint must not yield under an applied moment of 4408 kNm with a factor of safety of 1.5	IEC standard, maximum loading from generator short circuit extreme coupling shear	ANSYS determination of stress in part – compare to yield	Constraint (sustainability)
2) Fit into the allotted space for the joint	**A)** Joint must not interfere with functional components of the complete wind turbine assembly	The joint is constrained by other components (internal and external) that GE cannot change	Examination of final connection dimensions	Constraint (function)
3) Contribute to the gearbox reliability of 99% for a 20 year life	The combined reliability of all joint components must be 99.9999% over 20 years	This is the reliability required for all parts of the gearbox, GE will be satisfied with this number	Hand/ANSYS calculations of the statistical properties of the materials and their influence on fatigue life	Constraint (sustainability)
4) Requires no maintenance	Hours of maintenance needed for the joint is 0 hrs over 20 years	According to GE, maintenance cannot be done over the 20 year service life	Verify that fatigue life calculations do not depend on maintenance	Constraint (sustainability)

Marketing Spec	Engineering Spec	Rationale for Metric	Metric Evaluation	Constraint/ Goal
5) Decrease manufacturing cost	**A)** Joint components must be interchangeable	In the event of manufacturing errors, interchangeable components are able to be replaced during assembly	GE decision on interchangeability	Goal – priority 2 (economical and manufacturability)
	B) The price to manufacture the new joint must be 20 % lower than the original joint	GE wants this much improvement	Analysis of labor and material cost of each part of both processes new and old	Goal-priority 1 (economical)
6) Use safe manufacturing processes	The number of manufacturing and assembly operations which violate OSHA standards must be 0	Manufacturing and assembly by GE must comply with OSHA regulations	Analyze the manufacturing and assembly processes required	Constraint (safety)
7) The joint must not leak	The volume of fluid leakage from the joint must not exceed 0 L	System coolant/ lubricant leaks would contaminate the environment around the gear box, lead to functional problems, and increase maintenance needs	Appropriate design guides for the selected joint style will be followed to prevent leakage	Constraint (functional/ environmental/ sustainability)
8) Will survive environmental conditions	**A)** The max/min. operating temperature of all joint components must be greater than 59° C and less than -40°C	Wind turbines experience these temperatures during operation	Analysis of material for joint components	Constraint (environmental)
	B) The durability of materials used must be rated "Excellent" according to a materials analysis software package with organic solvents and other material contacts	GE requires all components of the wind turbine to be corrosion resistant, joint will be exposed to cooling oil	Analysis of materials used through materials analysis software package	Constraint (environmental)
9) Must not increase the total weight of the gearbox	The total weight of the gearbox with the redesigned joint must be within 10% of the current weight 26615 lbs	GE specifies the weight for the gearbox, more weight will increase the load on the tower	Calculations of weight for all components from material density and component volume	Goal – Priority 3 (functional)
10) Must comply with industry standards	Design must comply with IEC 61400-1 (sections 2a and 3a), Germanisher Lloyd (2003 with added 2004 supplements on wind turbines), and GE gearbox design guide	GE will not manufacture a gearbox that does not meet these standards	Evaluation of appropriate standards	Constraint (sustainability/ safety)

CONSTRAINTS

- Manufacturability
  - Specification 5A- Joint components must be interchangeable
- Sustainability
  - Specification 1D- The design must not fail due to fatigue (tensile, moment, and shear loads resulting from an operating toque of 1400 -1900 kNm) as per IEC AE88 duty cycle requirements
  - Specification 1E- The joint must not yield under an extreme shear moment of 4408kNm
  - Specification 3- The combined reliability of all joint components must be 99.9999% over 20 years
  - Specification 4- Hours of maintenance needed for the joint is 0hrs over 20 years
  - Specification 7- The volume of fluid leakage from the joint must not exceed 0 L
  - Specification 10- Design must comply with IEC 61400-1 (sections 2a and 3a), Germanisher Lloyd (2003 with added 2004 supplements on wind turbines), and GE gearbox design guide
- Economical
  - Specification 5A- Joint components must be interchangeable
  - Specification 5B - The price to manufacture the new joint must be 20 % lower than the original joint
- Environmental
  - Specification 7- The volume of fluid leakage from the joint must not exceed 0 L
  - Specification 8A- The max/min. operating temperature of all joint components must be greater than 59°C and less than -40°C
  - Specification 8B- The durability of materials used must be rated “Excellent” according to a materials analysis software package with organic solvents and other material contacts
- Health and Safety
  - Specification 6- The number of manufacturing and assembly operations which violate OSHA standards must be 0
  - Specification 10- Design must comply with IEC 61400-1 (sections 2a and 3a), Germanisher Lloyd (2003 with added 2004 supplements on wind turbines), and GE gearbox design guide

STANDARDS

- Safety
  - OSHA Standards – Specification 6
  - IEC 61400-1 (sections 2a and 3a)
  - Germanisher Lloyd (2003 with added 2004 supplements on wind turbines)
  - GE gearbox design guide

TECHNICAL ISSUES

- Design joint capable of withstanding 1400-1900 kNm of torque under normal operating conditions, and 4408 kNm of torque under extreme conditions
- Design a connection configuration to maximize the efficiency of the amount of torque transferred and minimize the manufacturing cost
- Maintain high component reliability to contribute to the overall reliability of the system
- Research types of joints currently used in similar applications
- Research patents on current gearbox designs
- Choose a suitable material for the joint that will meet corrosion and strength specifications
- Perform fatigue calculations (hand calculations and ANSYS) to ensure that a 20-year life is met
- Perform statistical analysis to determine that 99.9999% reliability is met
- Determine temperature properties of materials used
- Determine corrosion properties of materials used
- Perform finite element analysis on current design and loads
- Generate concepts for new joint design
- Select a new design on which to perform further analysis
- Perform finite element analysis for new joint design and loads

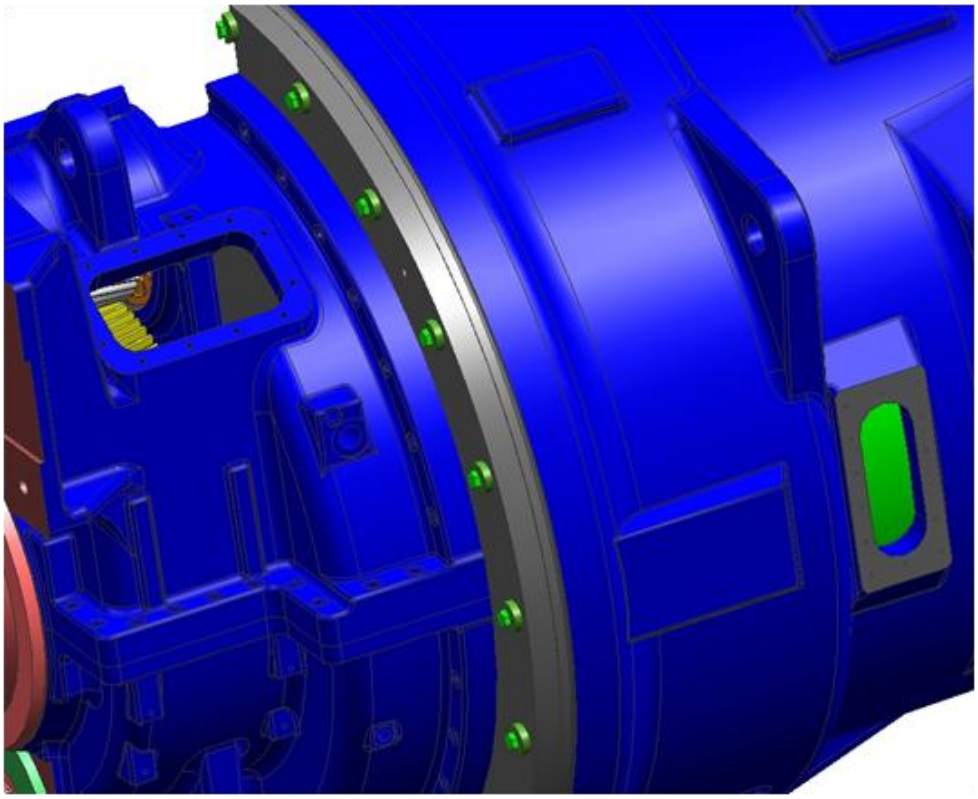

Figure 1 - 2.0 MW Wind Turbine Gearbox

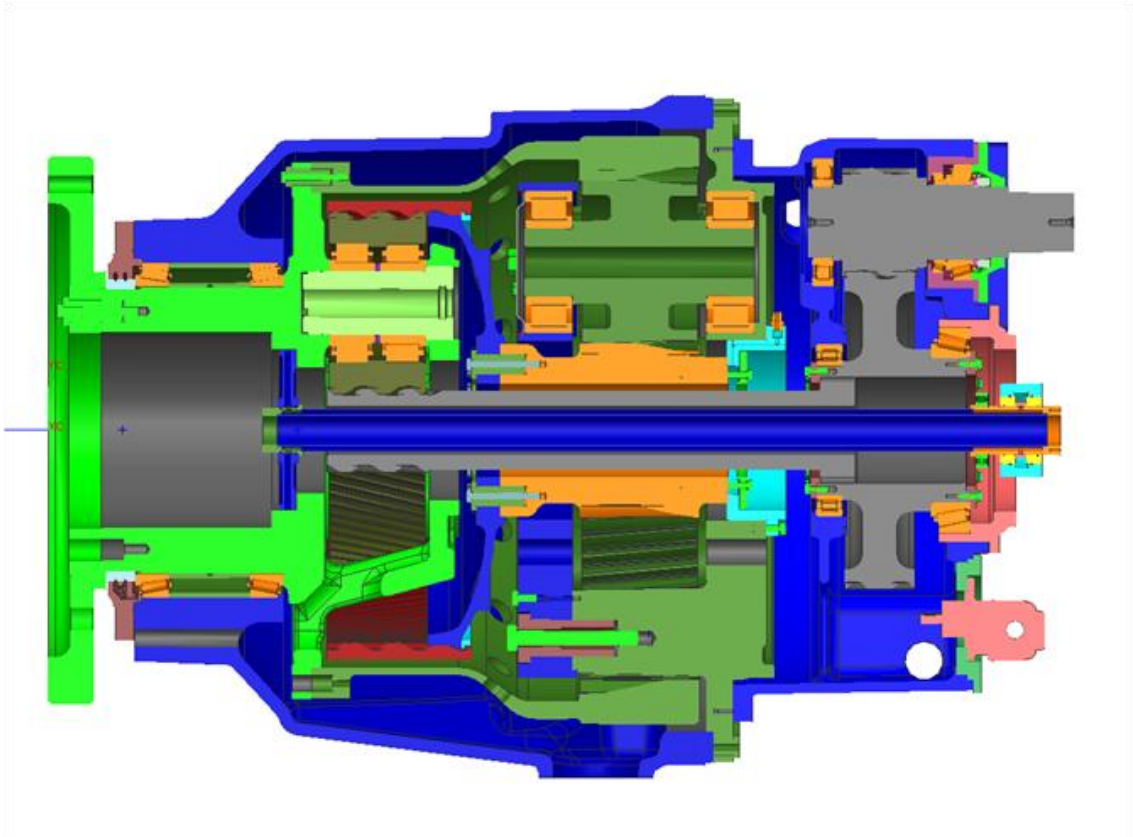

GAPS IN KNOWLEDGE

1. ANSYS simulations
2. Proper knowledge of different types of joints regularly used in industry
3. Patents already held on similar joints
4. Hand calculations to verify ANSYS results
5. Determine a method to evaluate reactivity between materials
6. Methods for determining the quality of seals

HOW THEY WILL BE SOLVED

1. Two students (Molly and Trevor) currently enrolled in FEA class. They have both purchased one of the suggested textbooks to independently learn more about finite element analysis and its application to this project. Should be able to learn enough about ANSYS and its fatigue calculations to finish most of the analysis of the current design by the end of the semester.
2. Continue to do research throughout the semester as more of our concepts are developed and finalized. Compare commonly used joint styles to concepts and use them to aid in development of concepts.
3. Continue to do patent searches about similar joints that are currently used in industry. Use these patents to aid in developing concepts so as to confirm that none of our new concepts are in violation of those patents.
4. Research in textbooks and talk with faculty about these hand calculations. Be able to relate material information to statistical reliability calculations.
5. Research materials programs that can provide a metric and a value for reactivity other than CES.
6. Do research of design guides that contain information about seals. Determine how to do these specific calculations depending on joint design.

INITIAL GOALS

- Generate concepts for redesign of joint
- Generate complete detailed ANSYS evaluation of current design
- Perform hand calculations of loading on parts and the fatigue life and reliability to verify ANSYS results of current design
- Evaluate concepts – decide on top 2 or 3 to pursue further
- Create Pro-E drawings of best concepts
- Begin to import Pro-E drawings into ANSYS, begin evaluating loading and feasibility of each concept

CURRENT DESIGN ANALYSIS

In order to determine the baseline characteristics, the current design was analyzed for fatigue characteristics. This was done using ANSYS Workbench and the Goodman Line approach for high-cycle fatigue. The model was constructed as shown below in Figure 2:

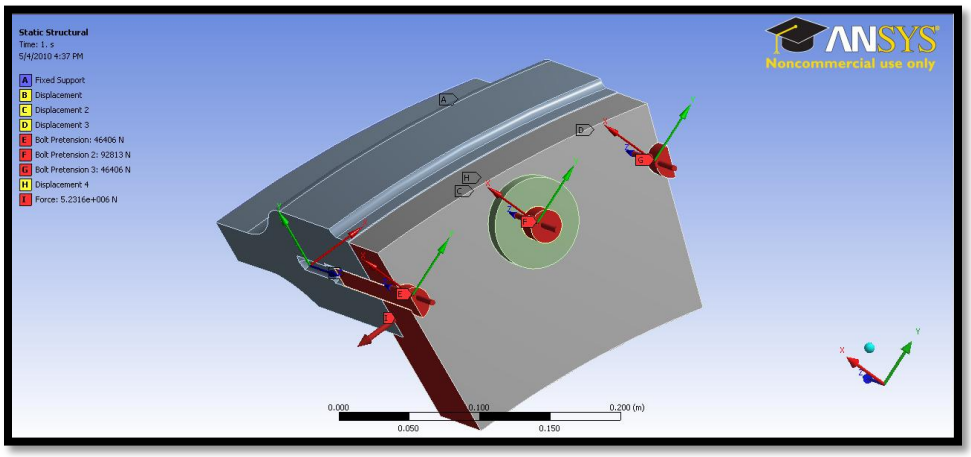

Figure 2

Each bolt was pretensioned to 92813N. The bushing interference was modeled at 0.01 mm. The axial load and shear load were added, and the maximum principle stresses were analyzed in fatigue. The results of the ANSYS Workbench analysis of the current design are shown below in Figure 3:

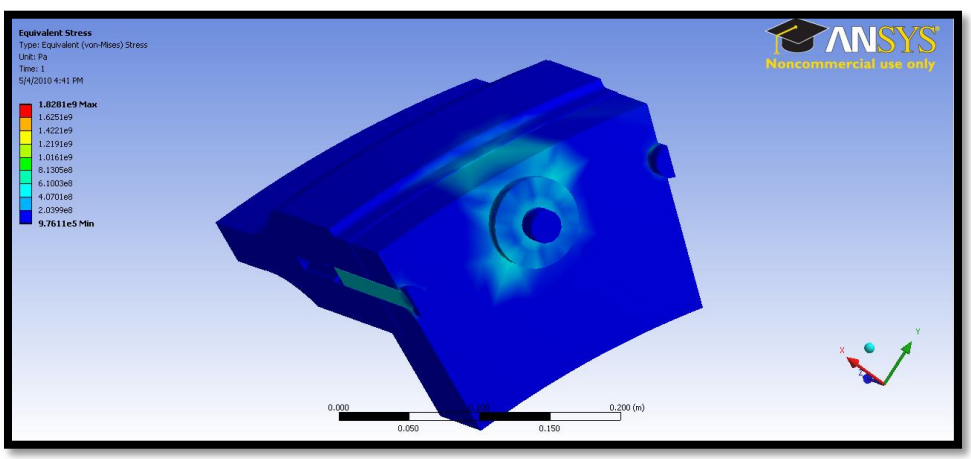

Figure 3

The current design was also analyzed in detail in the choosing when choosing a new design and compared to all concepts in the categories of FMEA, cost, weight, manufacturing, number of parts, space, assembly.

PATENT RESEARCH

Research was done to assure that design concepts were not in violation of current patents on similar applications. The following patents were found to have similarities that were considered moving forward through design.

Patent No. 6,065,898

Three Tooth Kinematic Coupling

Key Technology- A reduced contact area consisting of three teeth, where one side is composed of flat teeth and the other curved/ cylindrical

Implications- The design must not utilize three teeth or specific geometry defined in the patent

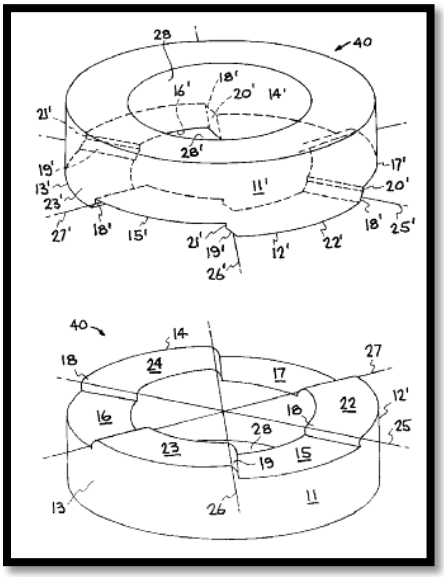

Patent No. 3,793,907

Torque Transmission Device

Key Technology- Variable frictional contact controlled through hydraulics, which can scale to the load being applied

Implications- Our design cannot make use of variable friction methods, or at the very least not one operated by hydraulic means

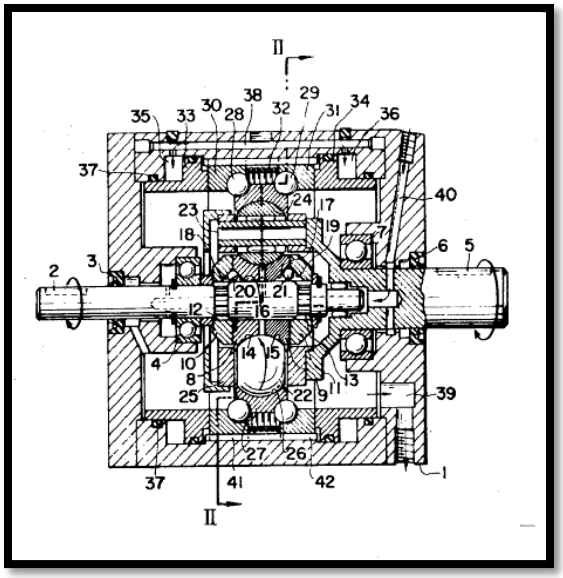

Patent No. 6,109,817

Driveshaft Coupler

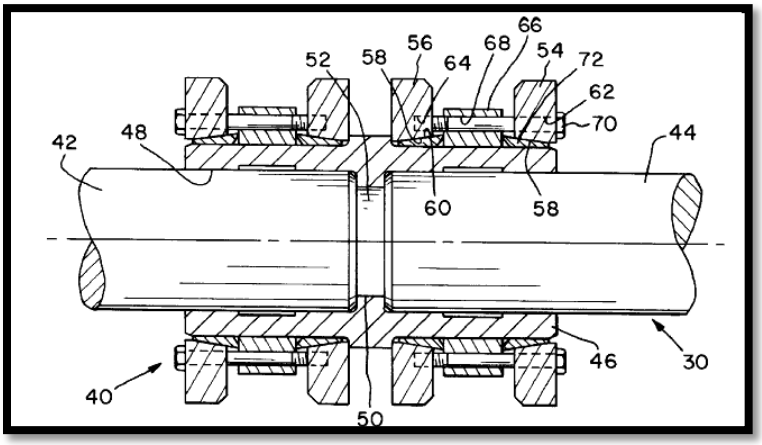

CONCEPT GENERATION

After the proposal and defining the problem, the brainstorming process began. Individual and group brainstorming was done to come up with ideas based on the specifications. Also, research was done on similar applications. Many ideas were considered and discussed. The following is a summary of the concepts that were chosen for further analysis based on group discussion along with a summary of the current design.

Bushings (Current Design)

The current design uses 48 bolts and 24 bushings to connect the input housing to the carrier. The bushings support the torque load and the bolts support the axial forces. A liquid sealant, Permatex, is spread in the contact area to create a seal. The bushing holes are match reamed and the bushings are cryo fit into these holes. These two processes combine to create a high total manufacturing cost. As a result of the match reaming, the carrier and input housing are unique to each other and cannot be switched out or replaced if damaged. This results in large financial consequences for a mistake in manufacturing.

Dowel Pins

This design will use bolts and dowel pins. The dowel pins will be used to carry the torque load and the bolts will support the axial forces. This is a proven concept in many different applications. However, the dowel pin holes may need to be match reamed and the dowel pins may need to be cryo fit.

Friction

This design uses the normal force created by bolts to create a frictional force that will transmit the torque. This design eliminates one component, the bushings. Also, it eliminates match machining and cryo fitting. However, this design relies on the frictional force between the carrier and input housing. Friction is sometimes difficult to deal with in design, due to variance between situations, catastrophic failure, and reliability concerns.

Key

A key concept is commonly used in transmitting torque between shafts. This design will require slots to be machined in the carrier and input housing. Then, a third piece will be inserted into the slot in order to transmit torque. This design will still use bolts to support the axial load. Due to the additional component, complex machining, and tight tolerances, this design may increase manufacturing and material cost.

Shear Wedge

The shear wedge is similar to the key design, however, it eliminates match machining. Slots will be machined into the outer surfaces of the carrier and input housing. Then radially oriented bolts will compress wedges into these slots. The wedges will support both the torque and the axial forces. The slots need not be held to tight tolerances due to the allowed deformation of the wedge.

Shrink Disc

The shrink disc is an additional ring component that is bolted to the outside of the input housing. The tapered, undersized inner portion of the ring compresses the input housing into the carrier plate. This normal force will create friction and transmit the torque. The ring will be machined from high strength steel. This additional component eliminates matched parts, but could increase manufacturing cost as a result of trying to meet tolerances. It could also increase the overall weight a size of the gearbox.

Spline

Spline teeth will be machined into the carrier and the input housing. The spline teeth will transmit the torque. Bolts will hold the two halves together and support the axial forces. The teeth will be made of cast iron, but spline teeth are normally made of hardened tool steel. This could result in increase space and weight required. Also, the spline teeth will need to be accurately machined to tight tolerances. These concerns could increase manufacturing cost.

PRIMARY CONCEPTS SELECTION

These initial concepts were analyzed based on the goals of the project to select 2-3 concepts that had the most potential to solve the problem and meet the specifications. These concepts were given ratings for each of the goals and compared to the current design. The 2-3 selected concepts from this process were then analyzed further to determine a final design concept. The following screening matrix is the result of these rankings. A higher number means that the concept is better suited for this application. The three concepts with ratings above or equal to the current design were considered in further analysis.

Table 1. Concept Screening Matrix

		Concepts														
		Weights	Bush Bolt		Dowel		Key		Spline		Shrink Disk		Friction Force		Shear Wedge	
Manufacturing Cost	Process difficulty	0.25	3	0.75	3	0.75	2	0.5	1	0.25	4	1	5	1.25	2	0.5
	Materials cost	0.2	3	0.6	3	0.6	4	0.8	5	1	2	0.4	5	1	3	0.6
Interchangeable Parts		0.25	2	0.5	2	0.5	3	0.75	4	1	4	1	4	1	3	0.75
Lightweight		0.1	3	0.3	3	0.3	2	0.2	3	0.3	2	0.2	3	0.3	1	0.1
Engineering Cost		0.2	3	0.6	2	0.4	2	0.4	1	0.2	1	0.2	2	0.4	1	0.2
Total		1		2.75		2.55		2.65		2.75		2.8		3.95		2.15

CONCEPT ANALYSIS

FRICTION

The friction concept was first analyzed based on the maximum loading to determine if a reasonable number and size of bolts can be used. The analysis was first done with the current bolt size M16, and then the analysis was expanded to find a bolt size that would use a reasonable number of bolts. The initial analysis was based on the following method, and the results are shown.

Transmitted force

$$F_f = \frac{T}{r}$$

Total Preload Required

$$F_a = \frac{F_f}{\mu}$$

Stiffness Coefficient

$$C = \frac{k_b}{k_b + k_j}$$

Proof Force

$$F_p = S_p * A_t$$

Total Axial Force

$$F_A = F_a + F_h * C$$

Number of Bolts Required

$$z = \frac{F_A}{F_p} * n$$

Bolt Size	Proof Force (kN)	Bolt Torque (Nm)	Number
M16	157	352	334
M20	256	715	205
M24	361	1213	146
M30	584	2452	90

Then, the analysis was refined and expanded, and the following results were found.

Proof Force	$F_p = S_p A_t$	• Load the bolt can carry without permanent deformation
Preload	$F_i = 0.7F_p$	• Actual amount of initial tension in the bolt
Relaxation	$F_I = F_i - r_t k_b$	• Amount of tension in the bolt over time
Total Loading	$F_A = F_a + (1 - C_k)F_h$	• Total normal loading required
Number of Bolts	$z = n\frac{F_A}{F_I}$	• Based on safety factor n=1.5

Coefficient of Friction			
	0.15	0.5	1
Bolt Size	Number of Bolts		
M16	520	158	80
M20	313	95	50
M24	220	65	34
M30	134	42	22
M36	92	28	14
M42	66	20	12
M48	50	15	8
M56	36	12	6
M64	28	10	5

SHRINK DISC

A shrink disc is any member of a class of coupling devices which react a torque loading between multiple co-axial components through the use of a tapered ring. This tapered ring is used to produce a compressive loading on a band placed around the axial components, causing this band to shrink. In doing so, a large normal force is produced between the band and the axial component. This large normal force allows the coupling to carry torque through the friction between the two surfaces. The key feature of this design is that the tapered surface of the ring produces a large mechanical advantage. This allows the normal force of the system to be generated with fewer or smaller bolts than other coupling devices such as bolted flanges.

Three different shrink disc configurations were initially proposed. One shown in figure 4 (left) proposed placing the tapered ring component in between the input housing and the carrier plate. This configuration was proposed due to its space saving potential. This design theoretically doesn't require any more space radially around the input housing. However, this design was discarded due to concerns about placing a large hoop stress on the interior rim of the input housing, and the additional material that this would require. To counteract this concern, a second concept was generated figure 4 (right). This concept proposed coupling the hoop stress on the input housing with a secondary tapered ring. This proposal hoped to limit the addition of more hoop stress bearing material by using stronger materials for the exterior ring. This first two proposed configuration both were ultimately discarded because they required a tapered surface of the system to carry the torsional loading of the system. This meant that load bearing capacity to be maximized the coefficient of friction of these surfaces must also be maximized. This has the unfortunate effect of increasing the load which has to be applied to the ring to install it, counteracting the benefits of the mechanical advantage of the tapered surface. With this realization, a third concept was proposed, shown in figure 4. (center). This design uses one tapered ring placed around the exterior of the input housing. This induces a compressive hoop stress on the input housing, causing it to constrict onto the carrier plate. This configuration allowed the torque reacting surface to be separated from the tapered surface. This there by allows the system to be designed such that the coefficient of friction is maximized between the carrier plate and the input housing interior, while on a separate surface the coefficient is minimized between the tapered ring and the input housing exterior. This design was the one selected for further consideration.

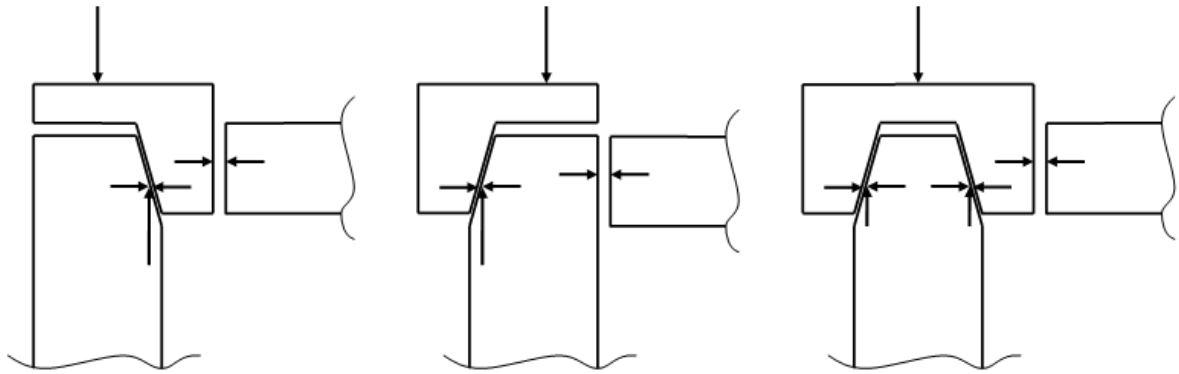

Figure 4. Basic Shrink Disc Concepts

The analysis which was performed on the shrink disk was based on simple strengths of materials, utilizing concepts such as hoop stress, and stress induced deformations. In this analysis it was first recognized that there would have to be an initial gap between the input housing and the carrier plate, for installation purposes. This initial gap represents a loss to the system which must first be overcome before any normal force can be generated between them to torque bearing surfaces. This lost loading was accounted for by equating the force required to generate a hoop stress to a force that would need to be applied axially to an equivalent simple rectangular member in order to cause it to change in length by the same amount as the change in perimeter of the input housing need to close the gap. After this was calculated, the additional normal force required to react the torque of the system was found form hoop stress calculations and normal force to friction force relations. Following this, the ring thickness was calculated based on hoop stresses and the total installation force was determined from the taper geometry. The resulting calculations are shown in Appendix pg 55.

SPLINE

The sizes of the teeth were determined based on the maximum loading case. This was done to determine if a reasonable size tooth could be used. Also, the safety factors for bending and contact stresses were examined based on analysis for gear teeth. The following equation was used for determining the area on one side of one tooth, adapted from a Voith Hirth Coupling Design Guide. It was determined from this design guide that the teeth could fit in the allotted space, based on the maximum loading and shear failure.

$$A = \left[\frac{\pi}{4}(D+d) - 2z * \tan(30) * (r+s)\right] * (D+d) * n$$

Also, the following equations were derived from common gear analysis methods to analyze bending and contact stress. These calculations would be used in further analysis of the gear teeth if the concept was selected.

Bending Stress

$$\sigma_t = \frac{Mc}{I}$$

$$I = \frac{b_w {L_o}^3}{12}$$

$$M = \frac{Wh}{2}$$

$$\sigma_t = \frac{3WhK_{factors}}{b_w {L_o}^2}$$

Contact Stress

$$\sigma_c = E' \sqrt{\frac{W' K_{factors}}{2\pi}}$$

CONCEPT COMPARISON

Once the initial calculations were done to determine the feasibility of each of the selected concepts, a decision matrix was used to select the final design concept. In this decision matrix, criteria that were based on the specifications were given different weights for comparison. The two most important categories for the decision matrix were cost and difficulty of assembly. This is because manufacturing cost is the main focus of this project. Other categories included were FMEA, number of parts, weight and space.

In order to calculate the manufacturing cost, weight and space, a common cross section was selected. The cross section seen below was used for the current designs and modifications for the concepts were considered.

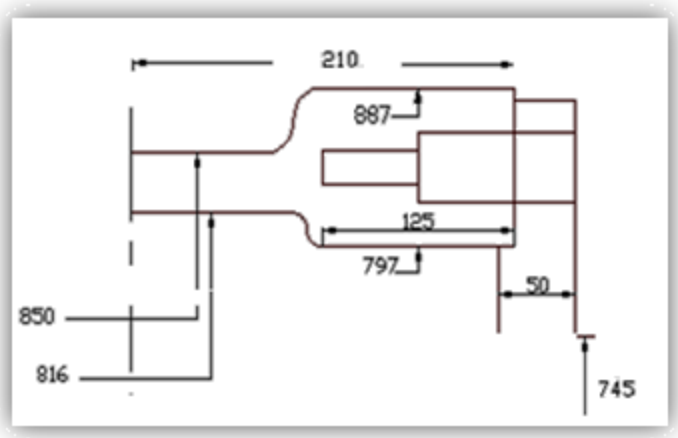

Figure 5

Using this cross section, initial and final volumes were used to calculate changes in weight and space. Also, to calculate difficulty of assembly, the volume changes were grouped by process and weighted by according difficulty. This, along with material cost, combined to give comparisons on manufacturing cost.

The Failure Modes Effects Analysis (FMEA) was done on each of the concepts and the current design. FMEA helps to determine how risky a design is and helps highlight design concerns. The FMEA was used to predict failure modes, rank severity, predict occurrence, and rank ease of detection. This gave comparison on how each of the designs could fail.

All of these calculations were tabulated and weighted accordingly. Then they were put into a decision matrix.

CONCEPT SELECTION

Concept	Assembly	Cost	FMEA	Number of parts	Additional weight	Additional space	Total
Weighting	9	10	4	5	*8*	2	*Total*
Current	1.00	1.24	0.63	0.54	*0.61*	0.00	*30.90*
Friction	0.56	1.03	1.25	1.00	*0.68*	0.00	*30.05*
Spline	0.25	1.50	1.66	0.16	*1.00*	0.98	*33.67*
Shrink	0.25	1.76	1.71	0.14	*0.61*	1.00	*42.47*

In the decision matrix, a lower number means that it is better for this application. From the chart, the friction concept got a similar rating to the current design. Also, since the friction concept has better ratings in the most important categories, the friction design was chosen for the final design. The friction design was considered for further analysis.

FRICTION CONCEPT

CONSIDERATIONS

Moving ahead with the friction concept, there were some concerns to highlight. First, the design relies on the frictional force between the input housing and the carrier plate. Friction is very specific to the application and is difficult to quantify in design. Frictional force can vary with normal force, surface finish, contact area, and surface integrity. The coefficient of friction varies greatly with application and surface finish. Through initial research, a large range of values were found for the cast iron on cast iron interface of the joint. This value for the coefficient of friction directly affects the number and size of bolts required in the joint. This is a concern because it will directly affect the safety and strength of the joint. Also, reducing the size and number of bolts will decrease cost.

Another concern in the design of the friction concept is fatigue analysis. This analysis is complicated and includes both ANSYS simulations and hand calculations to determine fatigue safety factors with the Goodman Line.

Other concerns include generating methods for locating the holes with tight tolerances, and sealing the interface. Also, joint relaxation and stiffness will need to be considered in bolt calculations.

FRICTION TESTING

Often, it is desired to know the value of the coefficient of friction. The coefficient may, and most often does, have two values. One value is static and the other being kinetic, dynamic state. The static coefficient of friction value is a desired value for our redesign of the bolted bushing joint in the 2.0 MW GE Wind Turbines. The test rig and procedure is as follows.

For accurate and realistic results, we want to design a test rig and devise a test plan that can be easily repeated. In order to determine the static friction value we must design a test rig that will have one piece moved (and the force to move it to be measured) and the normal force, perpendicular to the forced needed to move the "sled" to be adjustable and known. By doing such, the coefficient of friction can be determined through the relationship F= μN. F is the force used to move the sled, N the clamping/normal force and μ the coefficient of friction. The apparatus will be similar to the following figure:

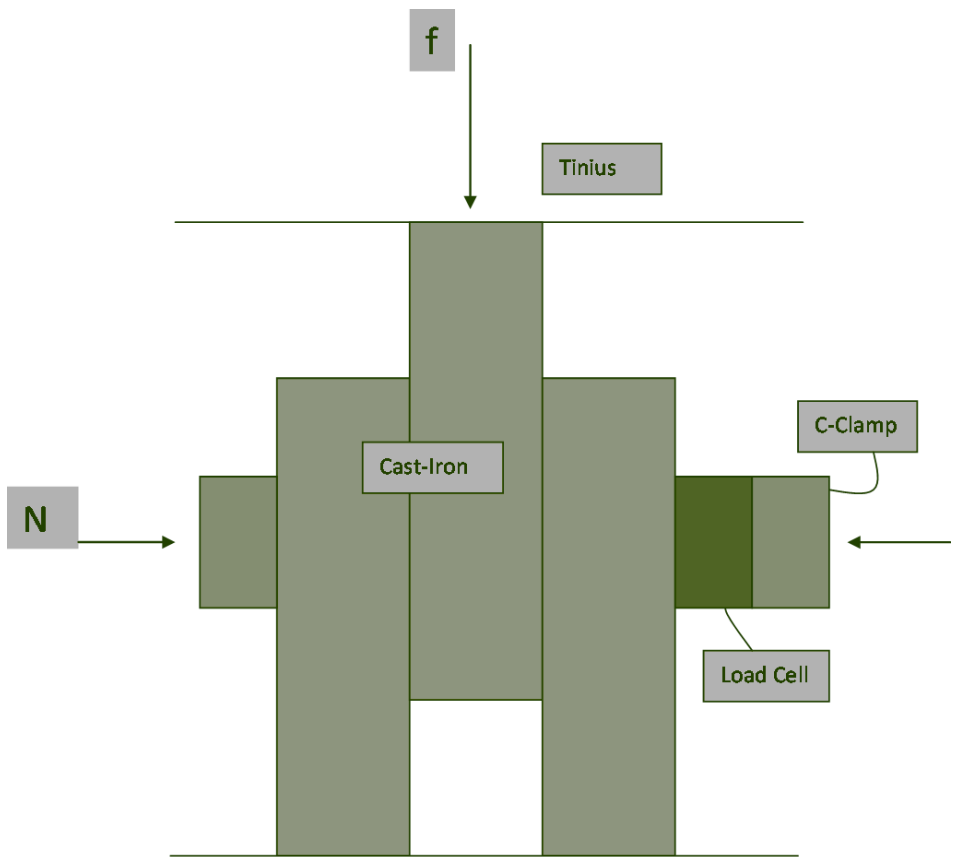

Figure 6

This will then be placed in a compression rig that can accurately measure force through the use of load cells. The large c-clamp as seen above will supply the normal/bolting force. The normal force can be adjusted using washers behind the bolt head in order to reduce the bolt grip length. The two relationships used to determine the proper grip length is Pi= T (KD). Pi is the preload, T is insulation torque, K is the torque coefficient, and D is the nominal size. M16 is the nominal bolt size. Then, the torque coefficient needs to be determined. This is done using the relationship K= TL (EAΔD). T is installation torque, L is grip length, E is the modulus of elasticity, ΔD is the measured bolt elongation, and A is the cross sectional area. Now that the normal/clamping force is known, the apparatus was placed in the compression rig and all force will be compressing the middle (elevated) sample material. Since this is in contact with the different sample material, the coefficient between material one and material two may now be determined. Through testing, the values for coefficient of friction were determined. Initially, for dry to dry surfaces the values were around 0.09. Then the contact surface was cleaned to remove any oils or debris. This increased the friction value to 0.12. Then permatex was placed between the blocks since the current design uses permatex and a method of sealing needs to be determined. Ultimately, the contact surface was ground and cleaned with acetone. This resulted in repeatable friction values at .21. This is the value used further in design. Below is a chart outlining the results of the different tests that were conducted.

Table 2. Friction Testing Data

Test	Coefficient of Friction
Machined Surface	0.09
Mach. Cleaned with Acetone	0.13
Mach. with Permatex	0.12
Ground Surface (Acetone)	0.21

The output from the compression rig for one of the surfaces that was ground was:

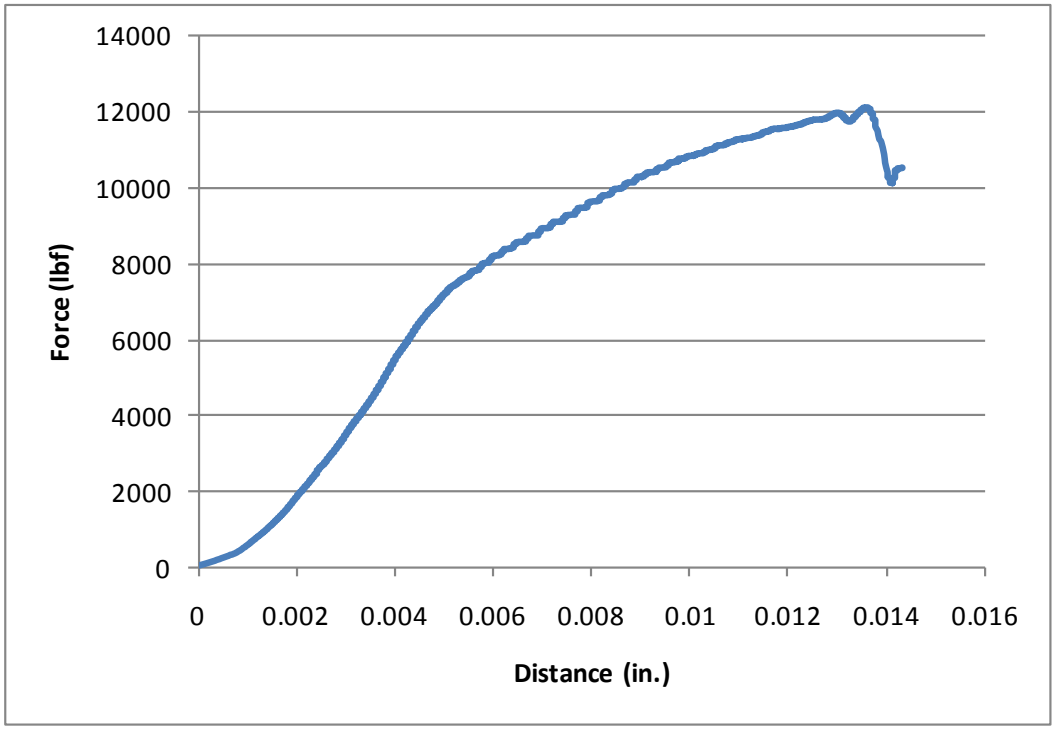

Figure 7

FINAL DESIGN

BOLT DESIGN

The main bolt hole design is seen in the appendix. The basic calculations and results can be seen here.

Proof Force	$F_p = S_p A_t$	• Load the bolt can carry without permanent deformation
Preload	$F_i = 0.7F_p$	• Actual amount of initial tension in the bolt
Relaxation	$F_I = F_i - r_t k_b$	• Amount of tension in the bolt over time
Total Loading	$F_A = F_a + (1 - C_k)F_h$	• Total normal loading required
Number of Bolts	$z = n\frac{F_A}{F_I}$	• Based on safety factor n=1.5

For M42

Coefficient of Friction $\mu = 0.21$

Normal force to transmit torque $F_a = F_f / \mu = 24.75$ MN

Total normal force $F_A = F_a + (1 - C_k) F_h = 24.88$ MN

Number of bolts $Z = n * F_A / F_I = 47.77$ bolts

Bolt Size	Number	Degree Between
M36	65	5.538461538
M42	48	7.5
M48	35	10.28571429

BOLT HOLE DESIGN

Once it was determined that M42 bolts would be used, it was then necessary to determine the appropriate bolt length. This process started with determining the minimum length of thread engagement needed to prevent the threads from stripping. To determine this, a standard machine design equation was used.

Determination of Minimum Thread Engagement

M42 Bolt

ultimate tensile strength of bolt

$S_{utB} := 1040MPa$

ultimate tensile strength of housing (GGG 40)

$S_{utN} := 450MPa$

number of threads per length

$n := 4.5mm^{-1}$

minimum outside pitch diameter of bolt threads

$OD_{Bmin} := 41.137mm$

maximum pitch diameter of internal threads

From: SteelMasters Fastener Manufacturer and Distributer Specs.

$PD_{Nmax} := 39.392mm$

tensile stress area of bolt

$A_{tB} := 1121mm^2$

safety factor

$SF := 2$

minimum thread engagement length

$$L_e := SF \frac{S_{utB} \cdot (2 \cdot A_{tB})}{S_{utN} \cdot \pi \cdot OD_{Bmin} \cdot \left[0.5 + 0.57735 \cdot n \cdot (OD_{Bmin} - PD_{Nmax})\right]}$$

$L_e = 15.93 \cdot mm$

After determining the minimum amount of thread engagement required, it was then desired that the threading of the holes in the input housing would start from the top of the holes,

no counter sinking. This was desired based on geometric limitations and the desire for cost savings. This type of hole should be the cheapest to produce, as it requires fewer machining operations to produce. This meant that for bolt sizing the, taking into account the minimum thread engagement as well as the thickness of the carrier plate and of a washer, the minimum length of bolt required would be ~73mm. After going through a variety of bolt suppliers, a bolt length of 100mm was selected, because it is commonly mass produced.

CARRIER PLATE HOLE DESIGN

In order to specify a hole diameter for the bolt holes on the carrier plate, it was first necessary to determine the tolerances with which the various involved features could be manufactured. In order to get estimates for these tolerances, ANSI B4.1-1967 standard tables for the tolerances associated with various machining processes were found in Machinery's Handbook. Using these tables, it was determined that the tolerances for locating the bolt holes would be based off of a milling operation, resulting in grade 10 tolerancing. The tolerancing for the hole diameters were also found to be grade 10 based on drilling operations. The tolerances at this grade were then estimated based on the size of the features that were being produced. The required bolt hole diameter was then calculated from the worst case misalignment and sizing of a hole on the carrier plate and its matching bolt hole on the input housing, based on the determined tolerances. Calculations and results are shown below.

Determine the minimum size of the carrier plate holes

$r_0 := 841mm$

$\theta_0 := 0deg$ — perfectly aligned holes

$r_1 := r_0 + 0.8mm$

$\theta_1 := 0.052deg$ — worst case misalignment 1

$r_2 := r_0 - 0.8mm$

$\theta_2 := -0.052deg$ — worst case misalignment 2

$b_r := 21mm + 0.1mm$ — worst case oversized bolt

$$D_{min} := 2\left(\sqrt{r_1^{\,2} + r_2^{\,2} - 2 \cdot r_1 \cdot r_2 \cdot \cos(\theta_1 - \theta_2)} + b_r\right) = 46.623 \cdot mm$$

Once the minimum hole diameter was calculated, the next step was to select the next size larger common metric drill bit, and use that for the final hole size.

Next larger common metric drill bit size

48mm

check tolerance

$$Da_{min} := 2\left(\frac{48}{2}mm - .1mm\right) = 47.8 \cdot mm$$

yields a minimum gap of...

$$Gap_{min} := \frac{Da_{min} - D_{min}}{2} = 0.589 \cdot mm$$

ALIGNMENT PIN DESIGN

For the purpose of aligning the holes on the carrier plate with those on the input housing, alignment pins were designed. When aligning the holes it is important to make sure that the bolts that go through them are not in contact with the interior of the carrier plate holes. If this were to happen, this could potentially cause a large shear load to be applied to the contacting bolt, causing it to fail. With this bolt failure could then potentially cascade to other bolts along the line as loading is redistributed, resulting in total connection failure. To prevent this from happening it the diameter of the alignment pins was oversized with respect to the bolts such that when there is no clearance between the alignment pins and the holes, the minimum acceptable gap size for the bolts would still remain after the pin had been removed. In this way, a few alignment pins could be spaced randomly around the bolt line to before the carrier plate is place on, and then after bolting the rest of bolts through there respective holes, the alignment pins could then be removed and replaced with bolts.

The diameter of the alignment pins was determined from the same tolerance calculation used in sizing the holes on the carrier plate. After determining the minimum gap size on these holes, this was then added to the to the bolt radius to determine the diameter of alignment pins.

Next larger common metric drill bit size

48mm

check tolerance

$$Da_{min} := 2\left(\frac{48}{2}mm - .1mm\right) = 47.8 \cdot mm$$

yields a minimum gap of...

$$Gap_{min} := \frac{Da_{min} - D_{min}}{2} = 0.589 \cdot mm$$

Find max diameter for un tapered section

$$Ad_{max} := 2\left(b_r + Gap_{min}\right) = 43.377 \cdot mm$$

yields 43mm + - 0.3mm

For inserting and removing the alignment pins, it was desired that a socket cap would be added to the top of the pins. The geometry of this socket cap was sized from British Standard Hexagon Socket Head Cap Screws – Metric Series BS 4168: Part 1:1981. From this standard, it was determined that the geometry normally associated with an M24 bolt would be used, even though the pins are threaded with M42 dimensions. This was done because the nature of the alignment pins requires that head diameter must be smaller than the diameter of the pin and M24 was the closest size that fit. It was also desired to add a tapered top section to the alignment pins

in order to ease the assembly process. This tapered section stared after the 50 mm long straight section that corresponded to the thickness of the carrier plate. The height of the tapered section was determined form the same standard used above, based on the recommended height of a socket head cap screw head. Next, a taper angle of 3° was selected for ease of machining and because and the peak of the tapered section, this still left more than the specified diameter of a standard M24 socket cap screw head. The final design is shown in Figure 8.

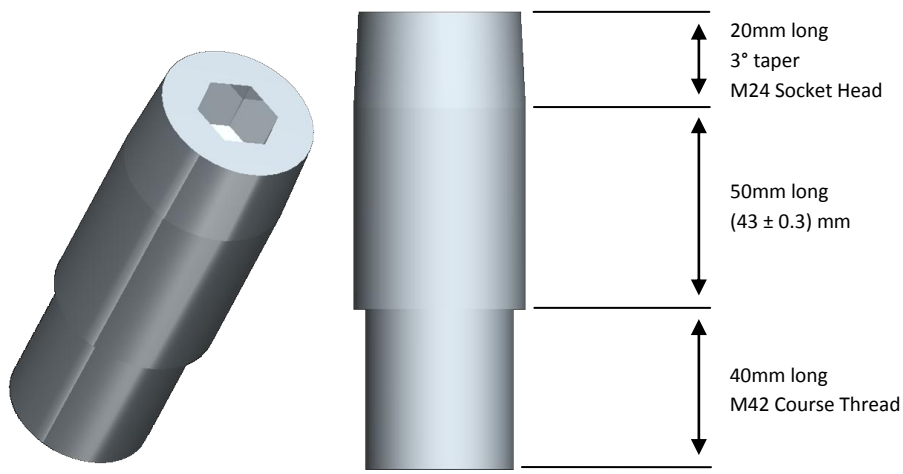

Figure 8. Final Alignment Pin design

SEAL

Since one of our requirements (specification 8) for our redesign is that the joint shall not leak we need to seal the face of the input housing and the face of the output housing as seen below.

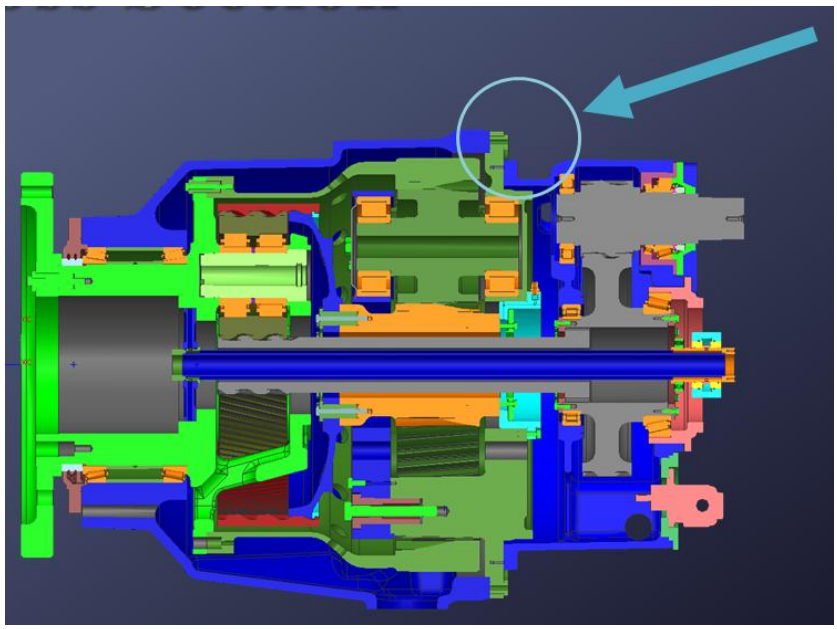

Due to specification 8 and the need for a perfectly dry frictional contact between the two surfaces, it was necessary to research guidelines and designs.

For static face seals, common practice is to use an o-ring. An o-ring is a ring of pliable material, such as rubber or neoprene, used as a gasket that is seated in a groove and compressed by two or more parts to create a seal interface. A standard size of .070" was chosen as our ring cross section (CS). We wanted to use two seals, one on either side of the bolt line so that nothing is able to get in the joint or out.

The placement of the o-ring from the edge of the carrier is critical so that the edge does not deform when the bolt force is applied. This was accomplished by using a factor of safety value of n=1.25, the compressive strength of$\delta_y = 700\, {}^{N}/_{mm^2}$, and the bolt force of $F_b = 25{,}774{,}670.57N$ with the relations shown in Appendix pg 61.

The radius of the grooves and the grooves on the face are then determined. The groove depth, groove width, inside diameter, and outer diameter define an o-ring groove. Once the grooves are defined, the o-rings must be given dimensions. Since the o-ring must sit in the groove tightly until assembled, the ring is to be stretched by 2 percent. These calculations are shown in Appendix pg 61.

The final design for the grooves can be seen in Figure 9:

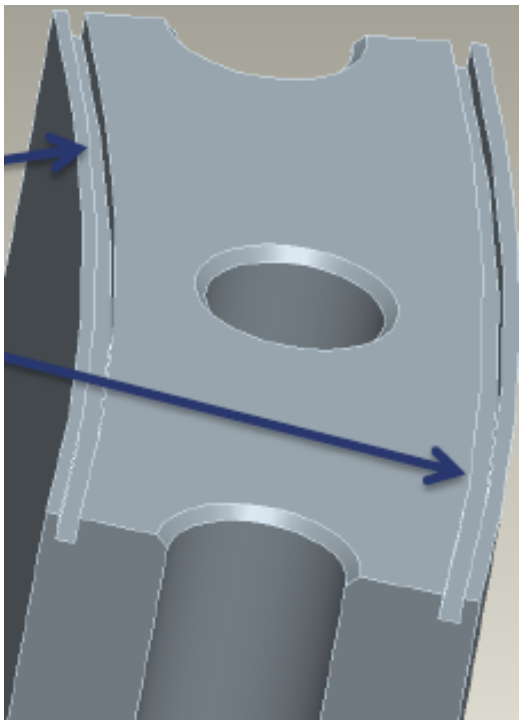

Figure 9

FATIGUE

Fatigue analysis was done in order to determine that the joint would last for a lifetime of 20 years. The maximum principle stresses would need to be determined through the use of an ANSYS Workbench simulation of the mean and alternating load conditions. The setup and pictured results of these simulations are shown in Appendix page 68. Then, the mean and alternating stresses would be determined by the use of the equations shown below.

$$\sigma_m = LC1 + \frac{(LC2 - LC1)}{2}$$

$$\sigma_a = \frac{(LC2 - LC1)}{2}$$

These mean and alternating stress values are then used in the Goodman Line equation for high-cycle fatigue in the carrier and the input housing separately.

$$K_f \frac{\sigma_a}{S_e} + \frac{\sigma_m}{S_u} = \frac{1}{n_s}$$

The bolt's safety factor in fatigue was determined using a variation of the Goodman Line criteria. This variation includes in it the stiffness of the joint, and is shown below:

$$n_s = \frac{S_u - \sigma_i}{C_k \left[K_f \sigma_a \left(\frac{S_u}{S_e} \right) + \sigma_m \right]}$$

The detailed calculations for fatigue are shown in Appendix pg 64. The results are shown below in Table 3.

Table 3. Fatigue Factors of Safety

Component	Safety Factor
Fixed Carrier	1.98
Input Housing	1.69
Bolt	27.3

RELIABILITY

The average strength of the material is known, as well as the average load. Both of these, however, will vary depending on material batch and type of loading experienced. For this reason, a statistical reliability analysis had to be performed to determine the likelihood of failure. The detailed calculations for this analysis are shown in Appendix pg 66.

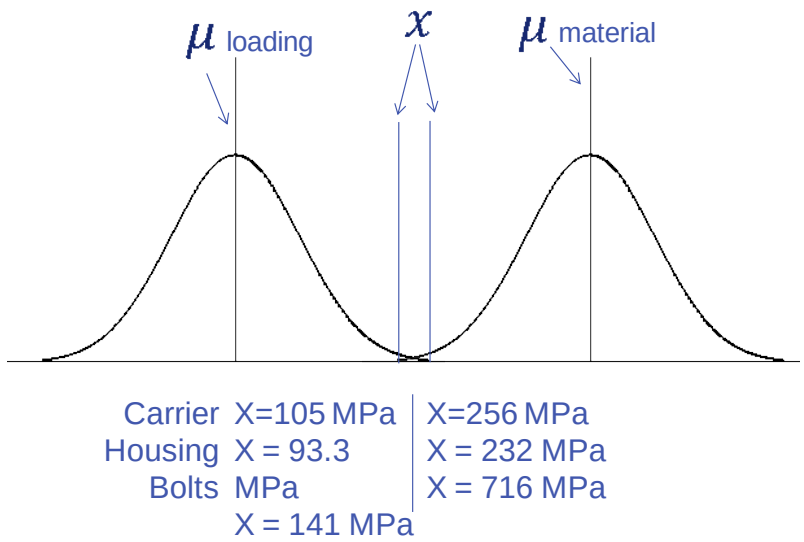

Figure 10

As indicated in Figure 10, the curve on the right represents the material yield, and the curve on the left represents the material loading. Where these two curves intersect indicates failure. Based on the values shown above that were calculated where the probability is equivalent to 99.9999%, the reliability will be at least 99.9999% per component. This means that it is less than .0001% likely that these two curves cross each other, and thus the part fails.

ASSEMBLY PROCESS

The assembly process to produce these gearboxes is as follows:

1. Lubricate the seals
2. Insert the seals into the glands
3. Clean both joint faces with acetone or similar cleaning agent
4. Insert the alignment pins
5. Using the alignment pins, align and mate the carrier plate to the input housing
6. Insert bolts in holes without alignment pins
7. Tighten the bolts to 7000 Newton-meters
8. Remove the alignment pins
9. Insert the remaining bolts
10. Tighten the remaining bolts to a pretension of 7000 Newton-meters

This process ensures proper alignment of the joint components as well as proper interface properties. Step 6 of the assembly (inserting bolts after inserting alignment pins) can be seen below in Figure 11.

Figure 11

WEIGHT ANALYSIS

Taking into account common components, the following table was generated to create a detailed weight comparison.

Table 4. Weight Comparison

Weight Comparison			
CURRENT	density (kg/m3)	volume (m3)	mass (kg)
Bushing			1.6592
Bolt	8280		0.24637
-BuHole	7100		1.380877
-BoHole	7100		0.2398267
TOTAL			6.9938319
NEW	density (kg/m3)	volume (m3)	mass (kg)
Bolt	8280		1.9808
Ring	7100	0.000738309	5.2419927
-Hole	7100		0.9836641
TOTAL			53.104517

The friction concept will be 46 kg heavier than the current design. Since the total weight of the gearbox is 12000 kg, this increase will only be 0.38% and not significant.

COST ANALYSIS

Again, common components were compared to determine the difference in material cost between the current design and the friction design. This following tables show the details.

Table 5. Cost Analysis

current design		new design	
component	$/1	component	$/1
washer	0.04073	washer	0.6504
bolt	5	bolt	19
bushing	37	seal	5.84
permatex	28.3	extra ring	3.407295
TOTAL	1158.255	TOTAL	952.4665

The friction concept will decrease the material cost of the gearbox by $200. However, there are other costs to consider. The manufacturing cost and risk of match reaming and cryo fitting were eliminated. Added costs include a ground surface finish and seal details. The eliminated costs are much more significant than the added costs.

SPECIFICATIONS

Specification	Justification
1A) Rotation is 0 deg	5.35*10^-5 deg
1B) Sliding is 0 mm	8.29*10^-4 mm
1C) Axial Separation is 0 mm	9.65*10^-4 mm
1D) Survive fatigue loading per duty cycle	n_b = 1.69
1E) Joint must not yield under 4408 kNm with n=1.5	n=1.507
2) Fit into allotted space	Clearance Regions of output housing will need to be expanded
3) Reliability is 99.9999% for 20 years	Exceeds reliability expectations
4) 0 hours of maintenance for 20 years	Germanisher Lloyd 6.5.3 Requires that bolted connections be inspected during regular maintenance
5A) Interchangeable parts	There are no instances of matched parts

Specification	Justification
5B) 20% reduction in manufacturing cost	Replace match reaming and cryo fit with grinding and seal groove machining
6) Use safe manufacturing processes	All features are producible with common practices
7) Joint must not leak fluid	O-ring seal and pressure distribution
8A) Operating range (-40 to 59°C)	All materials used are within this range
8B) Materials are durable in contact with others	Common materials were used
9) Gearbox is within 10% of current design weight	Adds 0.38% of total weight
10) Comply with industry standards	Germanisher Lloyd IECC duty Cycle ASTM G115-04 OSHA

CONCLUSION

The current bushing bolts design presents problems with manufacturing cost and interchangeability. The friction design solves these problems by eliminating match reaming and cryo fitting. This will allow the carrier plate and input housing to be created alone and interchanged. As a result, the process poses less risk of financial consequence in the event of manufacturing mistake.

The friction design replaces match reaming and cryo fitting with grinding and seal groove machining. Depending on the specifics of the implication of these manufacturing processes, the friction design could reduce the manufacturing cost. However, the new processes do not create matched parts. Also, the friction design reduces the material cost of common components by eliminating the bushings. The material cost is reduced by $200, and the weight difference is negligible.

Overall, the friction design is comparable to the current bushing design in fatigue, reliability, and strength. The design met all the functional specifications. The only concerns arose with GL standards for checking bolted joints (which does include the current design) and with clearances on the output housing. These are minor problems, the GL standard specification is something that is currently complied with and the output housing could be slightly adjusted if needed.

SPRING MEMBER CONTRIBUTION

Trevor Collins

Technical contributions include shrink disc initial design and analysis, specifying and ordering material and equipment for friction testing, bolt hole design, carrier plate hole design, alignment pin design, project time line (with help of others), solid model creation for use in finite element simulations, and review of bolt calculations.

Molly Eberly

Technical contributions include all detailed ANSYS Workbench modeling of the original and final joint, fatigue analysis and reliability calculations. Refined ANSYS models as design changed, adjusted for changes in material and geometry, and adjusted mesh as necessary to ensure accurate results. Used the numbers obtained from ANSYS models and did a fatigue analysis, including research and implementation of "k" knockdown factors and the Goodman Line approach to high-cycle fatigue. Also determined the reliability characteristics of the design using statistical methods. Communicated meeting minutes and agendas with the rest of the group weekly, set up working meetings, and maintained and updated the senior design binder. Compiled and graphed friction testing data. Concept tables and FMEA were devised and completed based on selection criteria, with help of other members. Friction testing was constructed in lab and performed, with help of other members.

Andrew Faivre

Technical contributions include the friction testing and seal design. The initial draft for friction testing procedure was written. The stock material needed to be cut and machined to the determined size. Upon finishing or testing, the seals needed designed for our seal interface. This included designing the grooves for the seals and the o-rings themselves.

Matthew Pitschman

Technical contributions include spline and friction concept initial analysis, concept comparison, friction testing contribution, bolt sizing, and weight and material cost calculations. Methods for tooth sizing of the spline concept were researched and used to determine tooth area. Gear teeth analysis methods were applied to the spline concept. Bolt calculations were performed for all three concepts to determine the number of bolts required. Graphically determined if spline and friction concepts would fit into allotted space. Detailed bolt sizing calculations including relaxation and stiffness were done to size bolts for the friction concept. This was used to determine the effect of the coefficient of friction on the number and size of bolts. Concept tables and FMEA were devised and completed based on selection criteria, with help of other members. Weight and material cost analysis was done on the final design. Also, friction testing experimental setup was researched, and then constructed in the lab, with other members.

APPENDIX

CONCEPT COMPARISON

CURRENT DESIGN

	Factors				Current
Manufacturing	**Material Stock (m^3)**				
	Carrier	0.036402262			
	Input Housing	0.063966282			
	Difficulty of Assembly (rating)				10
	Number of Assembly Steps (#)				79
	Machining Process	**Material Wasted (m3)**	**Tolerences Required (rating)**	**Difficulty of Processes (rating)**	89
	facing input housing	0.004761398	3	1	0.014284193
	facing carrier outside	0.004761398	2	1	0.009522796
	facing carrier inside	0.004761398	3	1	0.014284193
	match reaming	0.007402221	10	8	0.592177649
	drilling	0.00168892	1	1	0.00168892
					0.631957752
Cost	**Part**	**Quantity**	**Cost ($)**	**total**	
	Bolts M16	48	5.06	242.88	
	Bushings	24	36.7	880.8	
	Seals	0	0	0	
	Washers	24	0.466	11.184	
	Shrink Disc	0	0	0	
	Input Housing, carrier	1	495.7403154	495.7403154	
				0	
			Cost	1630.604315	
Engineering	**Difficulty (rating)**				0
Reliability	**FMEA (highest RPN)**				1000
	Number of Parts (#)				98
Weight	**(+/- lbs) 26615lbs**				1302.547146
Alloted Space	**(+/- m^2)**				0

FMEA Current Design				
Failure Modes	**Severity**	**Occurrence**	**Detection**	**RPN**
Bushing Shear	10	3	10	300
Bolt Shear	10	3	10	300
Bolt Tension	10	2	10	200
Casting Cracking	7	2	8	112
Bolt Torque	5	8	1	40
Match Reaming Error	8	6	1	48
Total				*1000*

FRICTION

	Factors				Friction
Manufacturing	**Material Stock (m^3)**				
	Carrier	0.0364			
	Input Housing	0.06395			
	Total	0.10035			
	Difficulty of Assembly (rating)				1
	Number of Assembly Steps (#)				69
	Machining Process	**Material Wasted (m3)**	**Tolerences Required (rating)**	**Difficulty of Processes (rating)**	70
	facing input housing (1 cm)	0.004761398	3	1	
	facing carrier outside (1 cm)	0.004761398	2	1	
	facing carrier inside (1 cm)	0.004761398	3	1	
	match reaming	0	0	0	
	drilling (M24)	0.004798946	1	1	
		0.014284194			
Cost	**Part**	**Quantity**	**Cost ($)**	**Total**	**m36**
	Bolts (M30)	42	37.66		62
	Bolts (M24)	68	10.49	713.32	
	Bushings	0	0	0	
	Seals	1	0	0	
	Washers	68	11.82	803.76	
	Shrink Disc	0	0	0	
	Input Housing/carrier	1	370.01	370.01	
				$1,887.09	
Engineering	**Difficulty (rating)**				1
Reliability	**FMEA (highest RPN)**				1600
	Number of Parts (#)				180
Weight	**(+/- lbs) 26615lbs**				1449.802379
Alloted Space	**(+/- m^2)**				0
					3230.802379

FMEA Friction Design				
Failure Modes	**Severity**	**Occurrence**	**Detection**	**RPN**
Bolt Shear	10	5	10	500
Bolt Tension	10	2	10	200
Casting Cracking	7	2	8	112
Bolt Torque	6	8	1	48
Seal failure	10	5	10	500
Bolt relaxation	8	3	10	240
Total				*1600*

SPLINE

Factors					Spline
Manufacturing	**Material Stock (m^3)**				
	carrier	0.04765535			
	Input housing	0.114106101			
	Difficulty of Assembly (rating)				4
	Number of Assembly Steps (#)				18
	Machining Process	**Material Wasted (m3)**	**Tolerences Required (rating)**	**Difficulty of Processes (rating)**	22
	facing input housing	0.00095228	2	1	0.001904559
	facing carrier outside	0.00095228	2	1	0.001904559
	facing carrier inside	0.00095228	2	1	0.001904559
	machine housing spline	0.01038744	8	10	0.8309952
	machine carrier spline	0.01038744	8	10	0.8309952
	surface treatment				0
	drilling	0.004116743	1	1	0.004116743
					1.67182082
Cost	**Part**	**Quantity**	**Cost ($)**	**total**	
	Bolts M24	13	10	130	
	Bushings	0	36.7	0	
	Seals	1	0	0	
	Washers	13	1.24	16.12	
	Shrink Disc	0	0	0	
	Input Housing, carrier	1	804.6203299	804.6203299	
			Cost	950.7403299	
Engineering	**Difficulty (rating)**				4
Reliability	**FMEA (highest RPN)**				1052
	Number of Parts (#)				29
Weight	**(+/- lbs) 26615lbs**				2143.92359
Alloted Space	**(+/- m^2)**				0.00875

FMEA Spline				
Failure Modes	**Severity**	**Occurrence**	**Detection**	**RPN**
Bolt Shear	10	1	10	100
Bolt Tension	10	1	10	100
Casting cracking	7	3	8	168
Bolt Torque	3	8	1	24
Corrosion	5	6	4	120
Tooth Shear	10	1	10	100
Misalignment	8	6	5	240
Seal	4	5	10	200
Total				*1052*

Spline analysis
Maximum torque case to determine tooth size

$D_o := 1774mm$ $d_o := 1594mm$ $z_o := 72$ $r_t := 5mm$ $s_t := 5mm$ $R_o := \frac{D_o}{2}$ $r_o := \frac{d_o}{2}$

$n_z := .65$ $T_{max} := 4408000N \cdot m$ $v := 1.8$

$$C_{avg} := \pi \cdot \left(\frac{D_o + d_o}{2}\right) = 5.29\,m$$

$$L_o := \left(\frac{D_o + d_o}{2}\right) \cdot \frac{\pi}{z_o} = 73.478 \cdot mm$$

$$x_o := \frac{L_o}{2} - 2 \cdot \tan(30deg) \cdot (r_t + s_t) = 25.192 \cdot mm \qquad h := \frac{x_o \cdot \cos(30deg)}{\cos(60deg)} = 43.634 \cdot mm$$

$$A_o := z_o \frac{x_o}{C_{avg}} \cdot \left(\pi \cdot R_o^2 - \pi \cdot r_o^2\right) \cdot \frac{1}{\cos(60deg)} \cdot n_z = 0.212219\,m^2$$

$$A_{simplfied} := \left[\frac{\pi}{4} \cdot (D_o + d_o) - 2z_o \cdot \tan(30deg) \cdot (r_t + s_t)\right] \cdot (D_o - d_o) \cdot n_z = 0.212219\,m^2$$

Total area for one side of all teeth

$$F_t := \frac{T_{max}}{\left(\frac{R_o + r_o}{2}\right)} = 5.235 \times 10^6 N$$ Transmitted force

$$F_a := F_t \cdot \tan(30deg) = 3.023 \times 10^6 N$$ Axial force required from clamping bolts

$$F_N := \sqrt{F_t^2 + F_a^2} = 6.045 \times 10^6 N$$ Normal force to the surface of the teeth

$$P_{max} := \frac{F_a \cdot v + F_a}{A_o} = 39.879 \cdot MPa$$ Total compressive stress in all the teeth

$$F_c := F_a \cdot v = 5.441 \times 10^6 N$$ Clamping force required

SHRINK DISC

	Factors				Shrink Disc
Manufacturing	**Material Stock (m^3)**	**Pre-Machined (m3)**	**Post Machined (m3)**	**Final Mass (kg)**	
	Carrier	0.015	0.012	87.311	
	Input Housing	0.093	0.075	126.396	
	Shrink Disk	0.122	0.046	361.627	
	Difficulty of Assembly (rating)				4
	Number of Assembly Steps (#)				38
	Machining Process	**Material Wasted (m3)**	**Tolerences Required (rating)**	**Difficulty of Processes (rating)**	42
	Input Housing				
	Facing of input housing	0.004761	3	2	0.028566
	Taper cut	0.007402	2	7	0.103628
	Facing of Carrier Plate Mating surface	0.00252	3	2	0.01512
	Drill 30 M-24 Bolt holes (larger diameter part)	0.001149	1	1	0.001149
	Drill 30 M-24 Bolt holes (smaller diameter part)				
	Carrier Plate				0
	Facing of Carrier Plate Rim	0.00252	3	1	0.00756
	Shrink Disk				0
	Mill out Taper	0.076	2	7	1.064
	Drill 30 M-24 bolt holes (over-sized)	0.001149	1	1	0.001149
					1.221172
Cost	**Part**	**Quantity**	**Cost ($)**		
	Bolts	30	314.7		
	Seals	2	0		
	Washers	30	9.552		
	Shrink Disc	1	1082.14		
	Input Housing	1	457.0475		
	Carrier	1	72.340072		
			1935.779572		
Engineering	**Difficulty (rating)**	3			
Reliability	**FMEA (highest RPN)**	1540			
	Number of Parts (#)	25			
Weight	**(+/- lbs) 26615lbs**	1310.735942			
Alloted Space	**(+/- m^2)**	+2inches			

FMEA Shrink Disc				
Failure Modes	**Severity**	**Occurrence**	**Detection**	**RPN**
Bolt Relaxation	6	3	10	180
Input Housing rim cracking	3	2	10	60
Disk Cracking	10	5	8	400
Disk Creep	8	5	10	400
Seal Failure	10	5	10	500
Bolt Shear	10	3	10	300
Bolt Tension	10	3	10	300
Total				*1540*

External Ring Shrink Disk Analysis

Variables

Gap between carrier and input housing

$G_o := 1mm$

Input housing wall thickness

$Th := 887mm - 797mm = 0.09\,m$

Input housing ring height

$H_h := 125mm$

Inner input housing Ring Radius

$R_i := 797mm = 0.797\,m$

Elastic Modulus of Input Housing

$E := 75GPa$

Maximum worst case torque

$T_{max} := 4408kN \cdot m$

Dry steel - steel coeficient of friction

$\mu_{dry} := 0.5$

Yield Strength of Ring Material: (AISI 4150)

$\sigma_{yield} := 1550MPa$

Disc Taper Angle

$\theta := 15deg$

Safety Factor

$SF := 1.5$

Lubricated steel - steel coeficient of friction

$\mu_{wet} := 0.15$

Gap Closing Pressure

$$P_G := \frac{G_o \cdot Th \cdot E}{R_i^2} = 10.626 \cdot MPa$$

Required Normal Force

$$N_{req} := \frac{T_{max}}{\mu_{dry} \cdot R_i} = 1.106 \times 10^7 N$$

Stoping Pressure

$$P_N := \frac{N_{req}}{2 \cdot \pi \cdot R_i \cdot H_h} = 1.767 \times 10^7 Pa$$

Total Pressure Needed

$$P_{total} := P_G + P_N = 28.298 \cdot MPa$$

Ring Thickness

$$Th_R := \frac{SF \cdot P_{total} \cdot (R_i + Th)}{\sigma_{yield}} = 0.956 \cdot in$$

Required Disk Instalation Force

$$F_{max} := P_{total} \cdot 2 \cdot \pi \cdot (R_i + Th) \cdot H_h$$

$$V_{install} := SF \cdot (\mu_{wet} \cdot F_{max} + F_{max} \cdot \tan(\theta)) = 12358.84 \cdot kN$$

FINAL DESIGN ANALYSIS

BOLT SIZING

Number of bolts needed for flat face friction torque transfer

Inner radius	$r_1 := 797mm$		
Outer raduis	$r_2 := 887mm$		
Torque load	$T_{max} := 4408000N \cdot m$		
Coefficient of friction	$\mu := .21152$	AGMA standard	Urural Page 667
GE safety factor	$n := 1.5$		
Modulous of elasticity class 10.9 bolt	$E_b := 207 \cdot GPa$	Modulous of elasticity GGG 40 and 50	$E_j := 169GPa$
Helical Gear Axial Force	$F_h := 156kN$		

Bolt Diameter	$d_b := 42mm = 1.654 \cdot in$	$p := 2mm$	pitch
Tensile area	$A_t := 1260 \cdot mm^2$	Table 15.2	Ugural Page 603
Average radius	$r_{avg} := \frac{r_1 + r_2}{2} = 0.842\,m$		
Friction force	$F_f := \frac{T_{max}}{r_{avg}} = 5.235 \times 10^6 N$		
Axial force	$F_a := \frac{F_f}{\mu} = 2.475 \times 10^7 N$		
Torque coefficient	$k_u := .2$	unlubricated	
	$k_L := .15$	lubricated	
	$k_g := .175$	GE	
Yield Strength	$S_p := 940 \cdot MPa$	Class 10.9 bolt	Ugural Page 614
Proof force	$F_p := S_p \cdot A_t = 1.184 \times 10^6 N$	Ugural Page 613	
Preload force	$F_i := F_p \cdot .7 = 8.291 \times 10^5 N$	Ugural page 618	.7 used by GE
Torque Per Bolt	$T_b := k_u \cdot d_b \cdot F_i = 6.964 \times 10^3 \cdot N \cdot m$		

Joint Stiffness

Page 729 Hamrock

Bolt dimensions

$L_s := 100mm$ $\qquad$ $L_i := L_s$

$L_t := 57mm$

$d_c := d_b$

$d_r := d_b - 2 \cdot .625 \cdot \left(\frac{.5 \cdot p}{\tan(30deg)} \right) = 39.835 \cdot mm$

Bolt Stiffness $\qquad$ $k_b := \left[\frac{4}{\pi \cdot E_b} \cdot \left(\frac{L_s + .4 \cdot d_c}{d_c^{\,2}} + \frac{L_t + .4 \cdot d_r}{d_r^{\,2}} \right) \right]^{-1} = 1.449 \times 10^9 \cdot \frac{N}{m}$

Housing stiffness $\qquad$ $k_j := \frac{1.813 \cdot E_j \cdot d_c}{2 \cdot \ln \left[\frac{(2.885 \cdot L_i + 2.5 \cdot d_c)}{(.577 \cdot L_i + 2.5 \cdot d_c)} \right]} = 7.285 \times 10^9 \cdot \frac{N}{m}$

Dimensionless stiffness Parameter $\quad$ $C_k := \frac{k_b}{k_b + k_j} = 0.166$

Joint relaxation

$c_o := .0001in = 2.54 \times 10^{-3} \cdot mm$

$N_o := 3$

$r_t := .001in + c_o \cdot N_o = 3.302 \times 10^{-5} m$

$F_I := F_i - r_t \cdot k_b = 7.812 \times 10^5 N$ New Preload Force

$F_A := F_a + (1 - C_k) \cdot F_h = 2.488 \times 10^7 N$ $\frac{F_I}{2} = 3.906 \times 10^5 N$

$z := n \cdot \frac{F_A}{F_I} = 47.772$

$z_a := 48$

$n_a := z_a \cdot \frac{F_I}{F_A} = 1.507$

SEAL DESIGN

Given

$R_I := 797mm$ $R_O := 887mm$ $F_b := 25774670.57N$ $n := 1.25$

$S_y := 700 \frac{N}{mm^2}$ $D_{eb} := 25.4mm$ $D_{be} := 24.0mm$

Area required for bolt force:

$$Area := \frac{F_b}{n \cdot S_y} = 2.946 \times 10^4 \cdot mm^2$$

Area required for bolt force:

$$Area := \frac{F_b}{n \cdot S_y} = 2.946 \times 10^4 \cdot mm^2$$

Since there will be two o-rings, one from each edge:

Radius required:

$$A_{RI} := \pi \cdot (R_I)^2 = 1.996 \times 10^6 \cdot mm^2$$

$$A_{RO} := \pi \cdot (R_O)^2 = 2.472 \times 10^6 \cdot mm^2$$

$$a_{tot} := A_{RO} - A_{RI} = 4.761 \times 10^5 \cdot mm^2$$

area of face not used :

$$A_w := \sqrt{\frac{Area}{\pi}} = 96.832 \cdot mm$$

$$Area_{free} := a_{tot} - Area = 4.467 \times 10^5 \cdot mm^2$$

Distance from edge:

$$r_i := \sqrt{\frac{Area_{free} + A_{RI}}{\pi}} = 881.699 \cdot mm$$

$$D := R_O - r_i = 5.301 \cdot mm$$

Two o-rings therefore distance from each edge is:

$$d := \frac{D}{2} = 2.651 \cdot mm$$

**use 3.0mm for ease of machining

Inner diameter of groove:

$ID := R_I + d = 31.482 \cdot in$

Outter diameter of groove using a standard o-ring diameter of .070 in:

$CS := .070in$

$G_w := CS \cdot 1.5 = 0.105 \cdot in$

$OD := ID + G_w = 31.587 \cdot in$

Groove depth for static face seals is to be 40% of CS:

$G_d := CS \cdot .4 = 0.028 \cdot in$ **use .030 in for easeof machining

ring location for ring B:

$OD_b := R_O - d = 34.817\,in$

$ID_b := OD_b - G_w = 34.712\,in$

Summary for pro-e:

CS=.070 in
GW=.105in
GD=.030in
Location for A:
ID=31.482 in
OD=31.587in
Location for B:
ID=34.817in
OD=34.712 in

Ring size for A:

$ID_{ringA} := ID \cdot .98 = 30.853\,in$

$OD_{ringA} := ID_{ringA} + .070in = 30.923\,in$

$CS_{ringA} := .070in$

Ring size for B:

$OD_{ringB} := OD_b = 34.817\,in$

$ID_{ringB} := OD_b - CS_{ringA} = 34.747\,in$

$ID_{ringBb} := .98 \cdot ID_{ringB} = 34.052\,in$

$OD_{RINGB} := ID_{ringBb} + CS_{ringA} = 34.122\,in$

$CS_{ringB} := CS_{ringA} = 0.07\,in$

Summary for Ring sizes

CS=.070in
SIZE FOR RING A:
ID=30.853in
OD=30.923in
Size for ring B:
ID=34.052in
OD34.112in

FATIGUE ANALYSIS

Carrier: *GGG 50*

$S_{uc} := 600MPa$ $S_{yc} := 336MPa$ $d := 1766mm$

$e_f := 1.58$ $f := -.085$ grinding

$k_f := e_f \cdot \left(\frac{S_{uc}}{MPa}\right)^f = 0.917$

$A_{95} := .0105d^2 = 0.033m^2$

Size factor

$D_e := .370d = 0.651m$

$k_s := 1.189\left(\frac{D_e}{mm}\right)^{-.112} = 0.576$ $k_r := .620$ $k_t := 1$ $k_m := 1$

$S_{epbendingc} := 0.5S_{uc} = 3 \times 10^8 Pa$

$S_{eptorsionc} := .29S_{uc} = 1.74 \times 10^8 Pa$

$\boxed{S_{ec} := k_f \cdot k_s \cdot k_r \cdot k_t \cdot k_m \cdot S_{eptorsionc} = 5.695 \times 10^7 Pa}$

Housing: *GGG 40*

$S_{uh} := 450MPa$ $S_{yh} := 305MPa$

$S_{eptorsionh} := .29S_{uh} = 1.305 \times 10^8 Pa$

$S_{epbendingh} := 0.5S_{uh} = 2.25 \times 10^8 Pa$

$\boxed{S_{eh} := k_f \cdot k_s \cdot k_r \cdot k_t \cdot k_m \cdot S_{eptorsionh} = 4.271 \times 10^7 Pa}$

$e_b := 4.51$ $f_b := -.265$ machined/cold rolled

$d_{sc} := 42mm$ $D_{sc} := 90mm$

$\frac{d_{sc}}{D_{sc}} = 0.467$

Stress Concentration

$K_c := 2.4$ Figure C.5

$q_n := 0.7$ Based on diameter of holes (50 mm)

$K_f := 1 + (K_c - 1)q_n = 1.98$

Bolt: *Grade 10.9 Steel* Based on tension values - Fi

$S_{ubo} := 1040MPa$ $S_{ybo} := 940MPa$

$$k_{fbo} := \left[e_b \cdot \left(\frac{S_{ubo}}{MPa}\right)\right]^{f_b} = 0.106$$

$d_{bo} := 42mm$

$$k_{sbo} := 1.189\left(\frac{d_{bo}}{mm}\right)^{-.112} = 0.782$$

$$S_{epbendingbo} := 0.5\, S_{ubo} = 5.2\times 10^{8}\ Pa$$

$$S_{ebo} := k_{fbo} \cdot k_{sbo} \cdot k_r \cdot k_t \cdot k_m \cdot S_{epbendingbo} = 2.685\times 10^{7}\ Pa$$

Goodman Line:

guess

$n_{sC} := 1$ $n_{sH} := 1$ $n_{sBo} := 1$

Carrier

Given

$$K_f \cdot \frac{\sigma_{aC}}{S_{ec}} + \frac{\sigma_{mC}}{S_{uc}} = \frac{1}{n_{sC}}$$

$Find(n_{sC}) = 1.981$

Housing

Given

$$K_f \cdot \frac{\sigma_{aH}}{S_{eh}} + \frac{\sigma_{mH}}{S_{uh}} = \frac{1}{n_{sH}}$$

$Find(n_{sH}) = 1.685$

Bolts

$$\sigma_i := \frac{805500N}{\pi \cdot (21mm)^2} = 5.814\times 10^{8}\ Pa$$

$C_k := .14$

$$n_{sBolt} := \frac{S_{ubo} - \sigma_i}{C_k \cdot \left[K_f \cdot \sigma_{aBo} \cdot \left(\frac{S_{ubo}}{S_{ebo}}\right) + \sigma_{mBo}\right]} = 27.297$$

$n_{sBolt} = 27.297$

RELIABILITY ANALYSIS

Carrier:

Material

$Cov := .05$

$\mu_{yield} := 336MPa$

$St_{dev} := \mu_{yield} \cdot Cov = 16.8 \cdot MPa$

$z := 4.7534$

$x := \left[St_{dev} \cdot z - \mu_{yield} \right] \cdot -1 = 256.143 \cdot MPa$

Stresses

$St_{devs} := 4.47325MPa$

$x_s := St_{devs} \cdot z + \sigma_{mC} = 105.163 \cdot MPa$

Housing:

Material

$\mu_{yieldh} := 305MPa$

$St_{devh} := \mu_{yieldh} \cdot Cov = 15.25 \cdot MPa$

$z_h := 4.7534$

$x_h := \left[St_{devh} \cdot z - \mu_{yieldh} \right] \cdot -1 = 232.511 \cdot MPa$

Stresses

$x_{sh} := St_{devs} \cdot z + \sigma_{mH} = 93.313 \cdot MPa$

Bolts:

Reliability :

Material

$\mu_{yieldb} := 940MPa$

$St_{devb} := \mu_{yieldb} \cdot Cov = 47 \cdot MPa$

$z_b := 4.7534$

$x_b := \left[St_{devb} \cdot z - \mu_{yieldb} \right] \cdot -1 = 716.59\,MPa$

Stresses

$x_{sb} := St_{devs} \cdot z + \sigma_{mBo} = 141.263\,MPa$

ANSYS WORKBENCH PICTURES

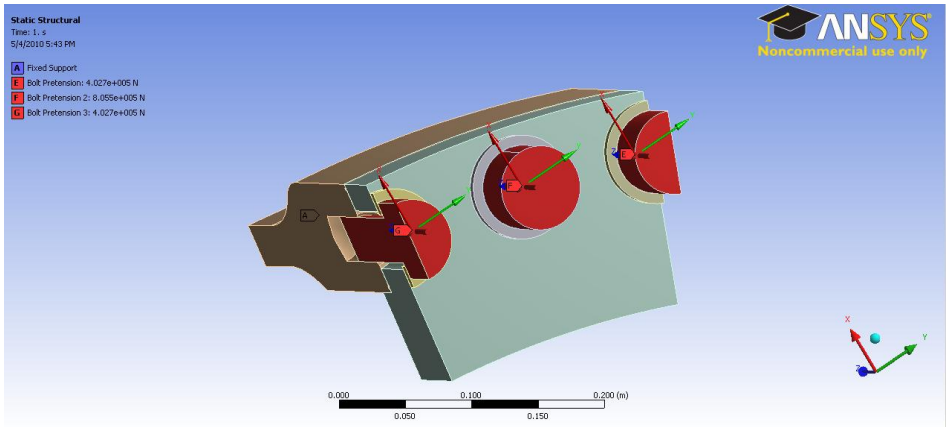

ANSYS Workbench Setup – Load Case 1

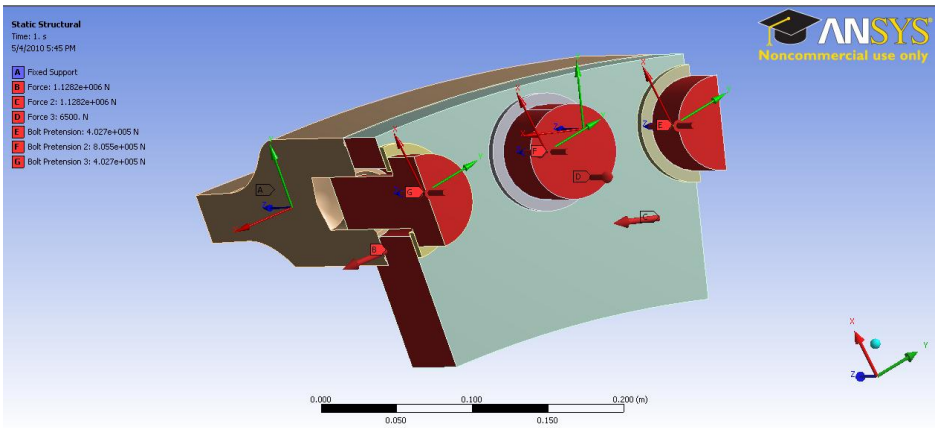

ANSYS Workbench Setup – Load Case 2

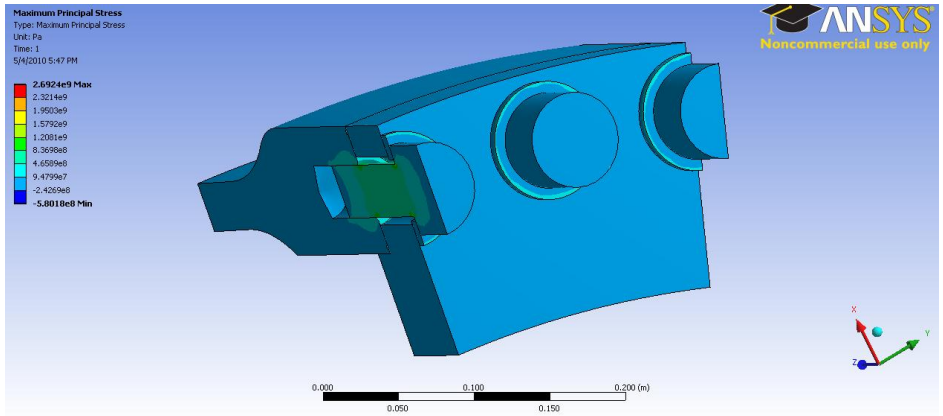

ANSYS Workbench Results – Load Case 2 Max Prin Stress

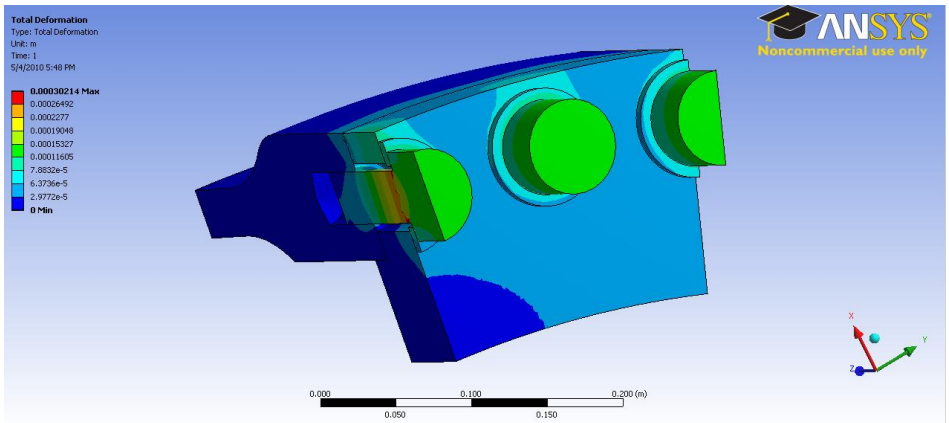

ANSYS Workbench Results – Load Case 2 Deflection

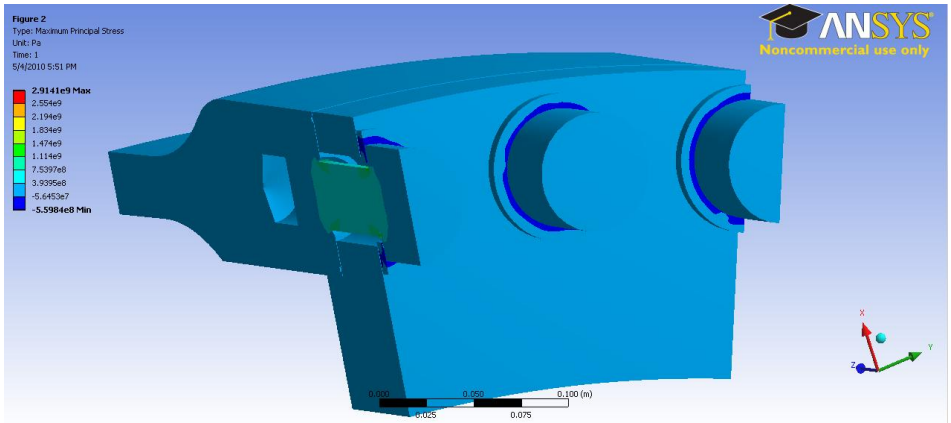

ANSYS Workbench Results – Load Case 1 Max Prin Stress

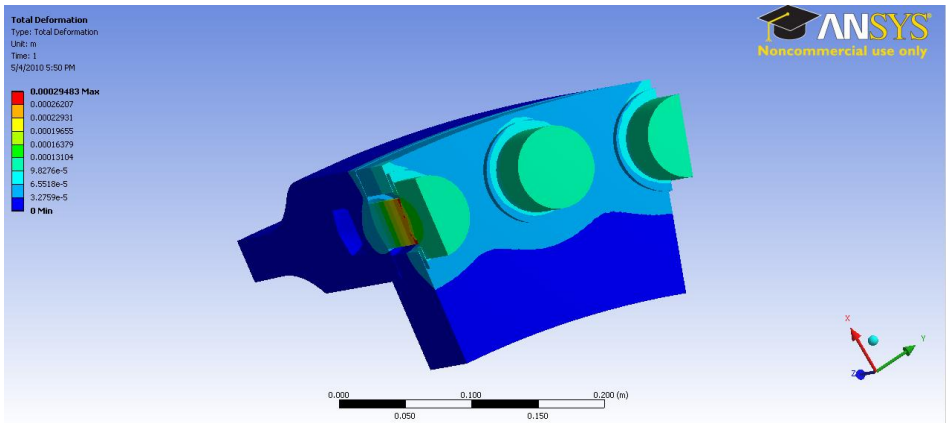

ANSYS Workbench Results – Load Case 1 Deflection

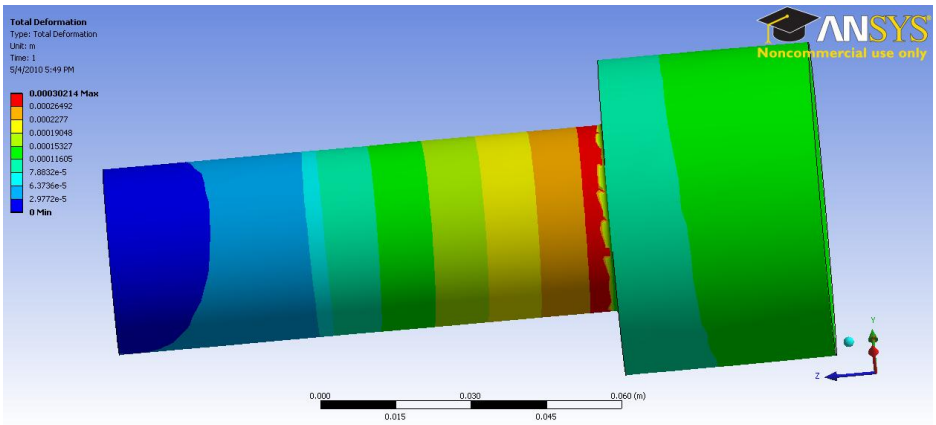

ANSYS Workbench Results –Bolt Deflection

OCTOBER GANTT CHART

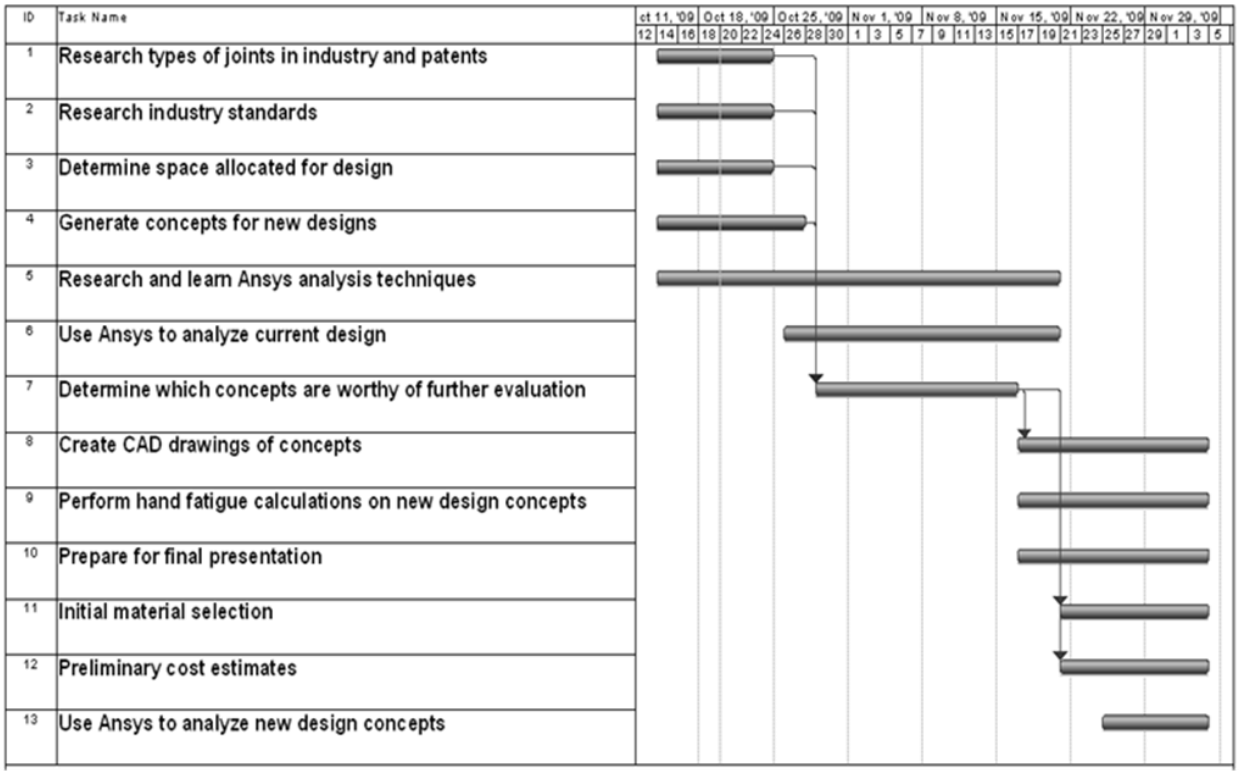

DECEMBER GANTT CHART

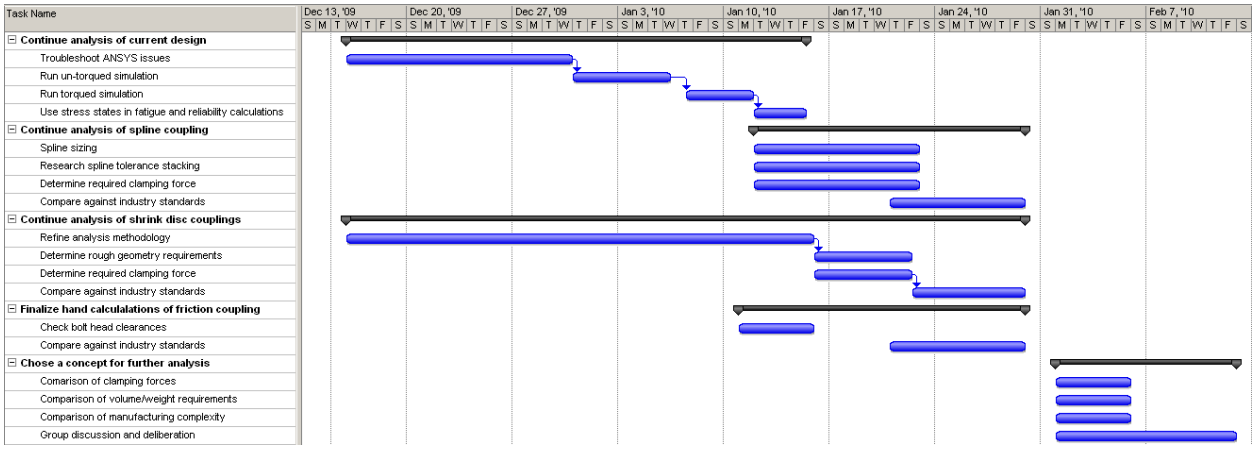

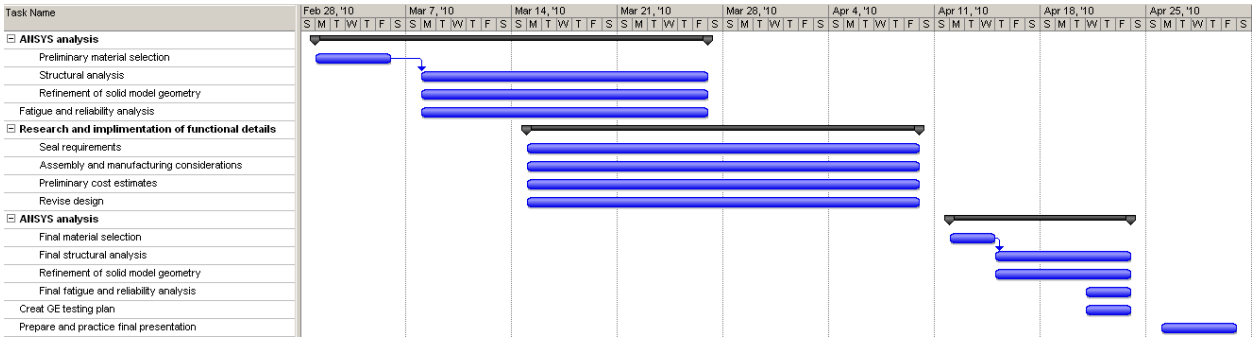

MARCH GANTT CHART