Erick Froede

Engineering Design Portfolio

Contact Information

Erick Froede
75 Savin Hill Ave.
Boston, MA 02125

Email: *ewf5012@gmail.com*
Phone: *(508)-333-1697*
Web: *linkedin.com/in/erickfroede & erickfroede.com*

I am a proud graduate in mechanical engineering from The Pennsylvania State University, with a wide variety of academic and industrial experience. Across all of these, I have had the opportunity to leverage my core values of leadership, innovation, and excellence to produce quality results in demanding situations. In the future, I am determined to make a positive impact on the world by pursuing unique challenges that allow me to grow both personally and professionally.

Sample of Relevant Courses and Projects:

ME 448/440W – Senior Capstone Design Courses: Successfully completed two separate projects for both General Electric and the US Army.

ME 547 – Design for Human Variability: Conducted an IRB-approved human factors study and developed a table optimized for team collaboration.

ME 445 – Microcomputer Interfacing: Designed and prototyped a commercial package health monitoring system.

ARL Laser Processing – Internship: Participated in the design of a proprietary lightproof laser cladding system.

ENGR 496 – Independent Study: Developed and produced an agricultural processor for use in rural African communities.

ENGR 497E – *International Leadership of Enterprise and Development*: Led an international team to create a prototype and supporting business case for a water purification device in Haiti.

EDSGN 597C – Global Engineering Teams: Realized the next generation mobile health clinic for South Africa.

Please see below for more!

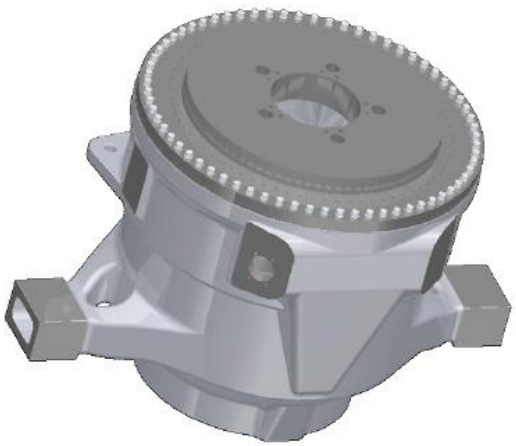

GE: Wind Turbine Gearbox Redesign

Corporate Contact: A.J. Smith, GE Transportation

Relevant Courses: ME 448, ME 360, EMECH 212/213

The construction of a gearbox is an expensive and complicated process, involving many production steps. The most critical and problematic of these is the match reaming of the carrier plate and input housing, creating a unique pair of components. If a defect is found in either of these parts both become unusable, leading to a large amount of monetary and material waste. In response, my group was able to develop a new friction based joining system that eliminated match reaming entirely. This resulted in simplified manufacturing, lower cost, and less overall risk for our sponsor in one of their important business segments.

Experiences: mechanical design, manufacturing principles, engineering economics.

US Army: Intuitive Controller for an IED Interrogation Arm

Corporate Contact: Jason Adamek, RDECOM & ECBC

Relevant Courses: ME 440W, EDSGN 496A

Improvised explosive devices (IED's) are the number one killer of US soldiers in Iraq and Afghanistan, producing a record number of amputees. In order to help combat this threat, the US Army has deployed the Buffalo Mine Resistant Ambush Protected (MRAP) vehicle. The MRAP features an attached robotic arm and claw, which is used to examine and remove IED's that threaten patrols and convoys every day. While the arm itself is a successful design, the means by which it is controlled is a difficult and frustrating experience. Specifically, it makes use of a standard construction crane controller, with little customization for this application. The result is an interface that is unclear, complicated, and requires a high degree of operator skill. This leads to increased training costs and a greater number of mistakes in the field. Therefore, my team designed a new controller specifically for this application with the purpose of reducing the learning curve, increasing ergonomics, and minimizing cost.

Experiences: CAD Modeling, rapid prototyping, design methodologies.

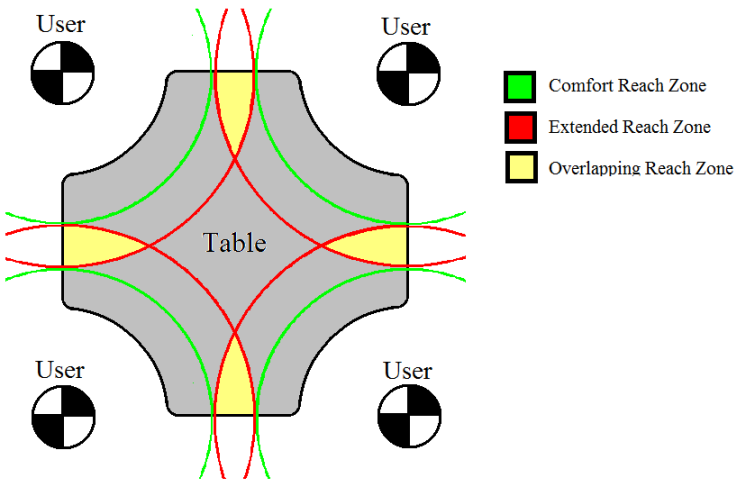

Workspace-Optimized Table

Faculty Mentor: Dr. Matthew Parkinson

Relevant Courses: ME 547

In the university setting, a table is often used by individuals for a variety of purposes. It is considered a working, studying, and eating surface in equal measure; often, these three functions occur simultaneously as well. This naturally leads to overcrowding, frustration, and reduced productivity. My group members and I decided to address this problem by creating a new type of table that maintained maximum personal work area while also allowing for objects to be passed between users. These are represented by the comfort and extended reach zones, respectively, and were based on both experimentally collected data and governmental anthropometric resources (e.g. NHANES and ANSUR). This information was then combined into a hybrid model and run through a Monte Carlo simulation to produce the greatest amount of accommodation.

Experiences: statistical software, anthropometry in design, human factors and ergonomics.

Package Health Monitoring System

Faculty Mentor: Dr. John Lamancusa

Relevant Courses: ME 445, ME 345, EE 212

Typically, when a package is shipped, it is sent with the hope it will arrive at its destination intact and undamaged; however, there is a very real possibility that this will not be the case. During transit, packages are exposed to a number of hazards, including harsh drops and fluctuating temperatures which can lead to both visible and invisible damage to its contents. Therefore, my partner and I developed a system that can be included with a package to record these temperatures and impacts via a thermistor and accelerometer, labled Sections A and B respectively. This information is then displayed in Section C for consideration by the recipient once it arrives.

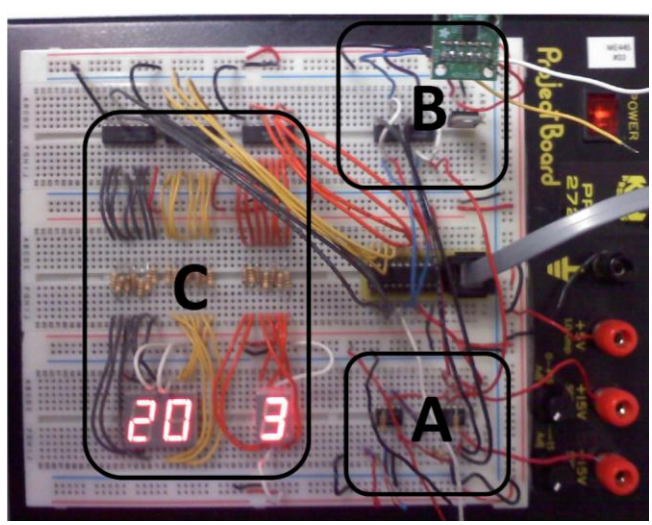

Experiences: PIC programming, breadboard prototyping, integrated circuitry.

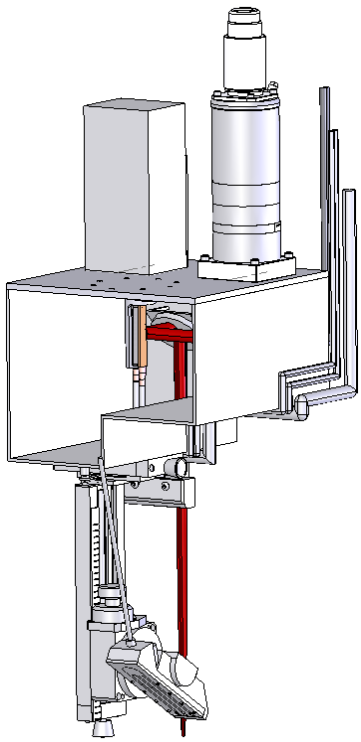

Laser Cladding System

Faculty Mentor: Dr. Todd Palmer

Relevant Courses: MATSE 259, PHYS 214

The US Navy's nuclear submarine fleet protects the nation's interests around the globe and is out to sea for months at a time, covering thousands of nautical miles. This puts tremendous wear and tear on every component, but most notably drive shafts. They are subject to both surface degradation as well as corrosion, reducing their service life and eventually demanding time consuming and expensive replacement. Alternatively, the shaft could be resurfaced and protected by laser cladding it with a layer of restorative metal, returning it to service for less time and money. My fellow interns and I created a prototype design to address this task and serve as a platform for further testing and evaluation.

Experiences: laser fundamentals, material science principles, optics.

Baobab Agricultural Processor

Faculty Mentor: Dr. Richard Schuhmann & Mike Erdman

Relevant Courses: ENGR 496

Across Africa, there are a number of natural resources that have the possibility of providing real economic benefit to local communities. One of these is baobab, a hard-shelled fruit that has been known for the nutrition of its pulp and quality oil within its seeds. Both of these products, sold overseas to the US or Europe, have the power to provide jobs and income to locally owned cooperatives. In order to achieve this goal, my team and I designed a machine that extracted both pulp and seeds from raw baobab based on several previous prototypes developed at Penn State. Then, we travelled to Morocco and worked with African students to build it out of locally sourced parts and material over the course of several days. Currently, our generation of the machine is the preferred platform for future deployment at partner cooperatives in both Senegal and Benin.

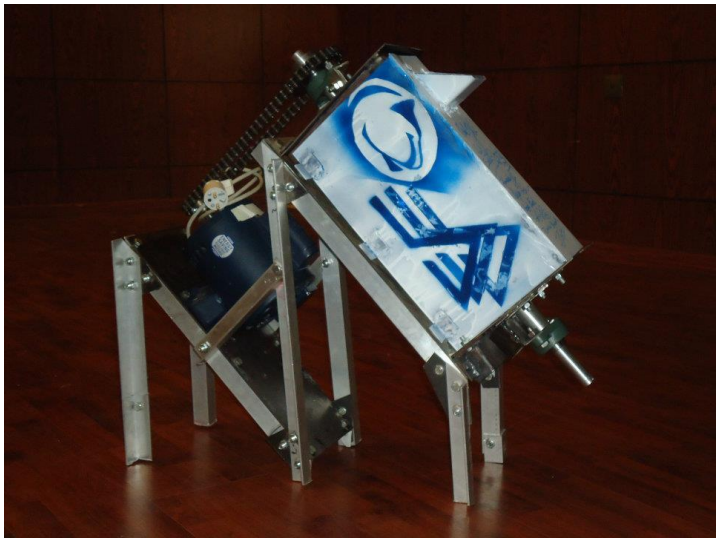

Experiences: cross-cultural communication, concurrent engineering, essential design.

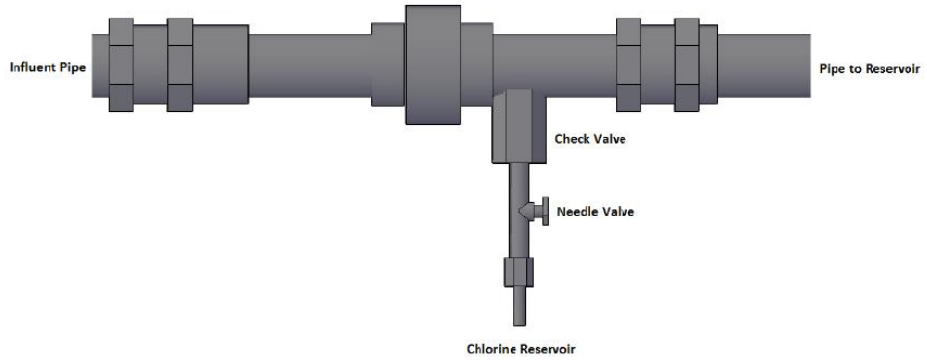

Flow Dependent Chlorinator

Faculty Mentor: Dr. Richard Schuhmann

Relevant Course(s): ENGR 497E, ENGR 497C, ENGR 407

The island of La Gonâve, off the coast of Haiti, is part of a region with the highest water poverty index in the world. On the ground, this means that the residents of this area struggle to find clean water sources to support their everyday life. Partnering with a local NGO, Roots of Development, I led a group of Hungarian business students and Penn State engineers to develop a comprehensive solution. This consisted of implementing an innovative flow dependent chlorinator in combination with a sustainable and viable business plan to finance water purification in the island's communities. This culminated in a trip to Corvinus University in Budapest to present our results and meet with project stakeholders.

Experiences: leadership, international collaboration, entrepreneurship.

Mobile Health Clinic

Faculty Mentor: Dr. Matthew Parkinson

Relevant Course(s): EDSGN 597C

Over 10 percent of the population of the Western Cape Province of South Africa lives in remote rural areas supporting the agricultural industry and primary health care for these individuals is provided by mobile health clinics (MCs), staffed by clinical nurse practitioners. The current MC design is outdated and ineffective, preventing delivery of necessary clinical services to this vulnerable population. I led a team of engineering students from the University of Stellenbosch and Penn State to develop the next generation MC in partnership with the South African Medical Research Council. This was accomplished by utilizing a larger vehicle platform, implementing modern medical equipment, and applying a modular design approach to allow adjustment of the clinical space to meet future needs. The dimensions and placement of items in the clinic was determined through anthropometric analysis using a virtual population model, culminating in a design that improves the quality of health care and the staff's working conditions.

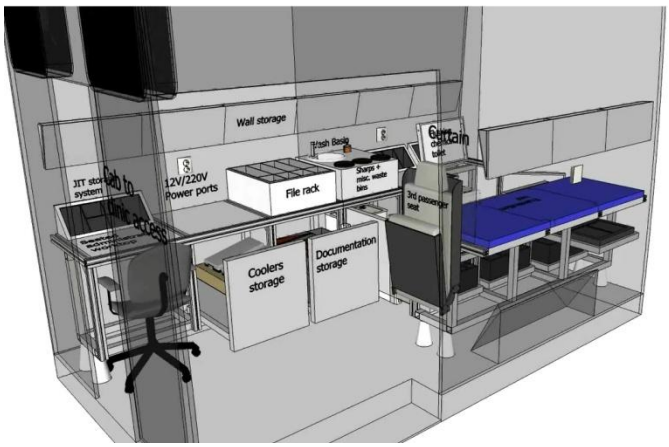

Experiences: project management, innovation processes, design thinking.

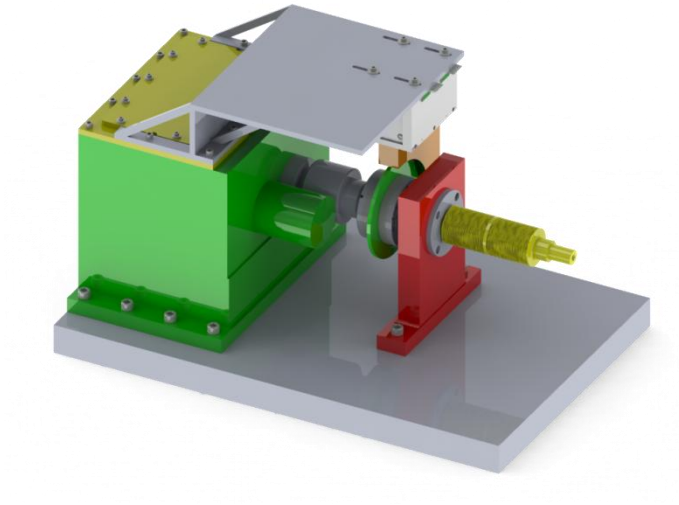

Friction Measurement System

Faculty Mentor: Dr. Suren Rao

Relevant Course(s): ME 360, EDSGN 496A

Gear technology is integral to a wide variety of industries that make our modern world possible, such as automotive, power generation, rail, and much more. To support this demand, the Drive Train Center (DTC) conducts a wide variety of gear related research and testing. During my internship at the DTC, I was the principal designer of a friction measurement system that was retrofitted on a four-square gear testing machine. This required extensive modification of the machine itself, as well as production of customized components that would take into account demanding size and vibration requirements. The system was completed on time and on budget, providing the DTC with new capabilities and enhancing its competitiveness.

Experiences: component evaluation/selection, mechanical testing systems, machining and tolerances.

Optimal Control of a Subway System

Faculty Mentor: Dr. Hosam Fathy

Relevant Course(s): ME 597B, ME 450

Today, passenger transit systems are an integral part of many cities around the world, and will only become more prevalent through increasing urbanization. However, very little infrastructure or knowledge exists to support regenerative energy storage in these cases, which would make them increasingly economical and environmentally friendly. Therefore, the purpose of this project was to apply a deterministic dynamic programming (DDP) solution to a metro transit system to optimize its performance using a flywheel wayside energy storage system (WESS) in combination with an external power grid. My team's solution successfully created a trajectory which is cyclic in nature, allowing the train to pass between stations while maintaining a minimum energy in the WESS. Additionally, the case without energy storage was briefly examined, and the result indicates there is significant energy savings potential for a system with regenerative energy storage.

Experiences: MATLAB programming, optimization, energy storage systems.

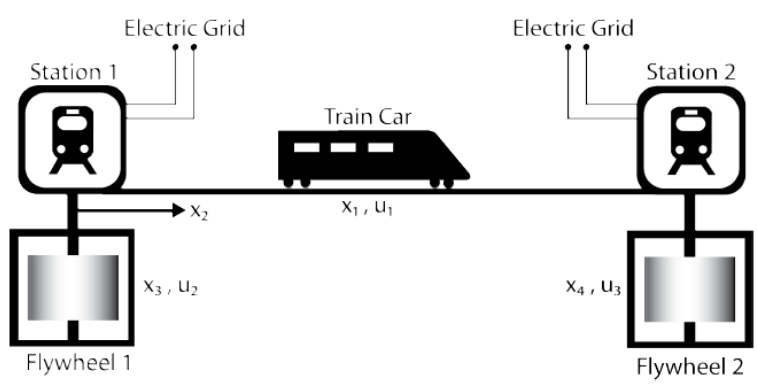

Pericyclic Mechanical Transmission

Faculty Mentor: Dr. Martin Trethewey

Relevant Course(s): ME 600, ME 461

In recent years, there has been significant interest in the development of new and innovative rotorcraft gearboxes. Future helicopter transmissions aim to reduce overall gear train weight while maintaining efficiency and reliability. The Pericyclic Mechanical Transmission (PMT) is one of the compelling candidates that can achieve these goals. It consists of a high reduction ratio, high tooth contact ratio, and nutating/rotating mechanism which incorporates meshing conjugate face-gear pairs. The use of a face gear pair is unique, and represents a new area of research. Using computer aided design, simulation and transmission error (TE) analysis I was able to produce original performance data and further develop the PMT as a viable next-generation solution.

Experiences: gear design, commercial FEA packages, aerospace engineering concepts.

NASA Rocket Test Stand

Faculty Mentor: Michael V. Paul

Relevant Course(s): ME 360, EDSGN 496A

The civilian space industry is a rapidly growing opportunity that requires increasingly greater talent and involvement by the education and business sectors. To support this goal, the Google Lunar X Prize Foundation has presented a $40 million dollar incentive for the first privately funded team to land on the moon, travel 500 meters, and provide audio/video broadcasts. As the only university in the competition, the launch of Penn State's Lunar Lion spacecraft through a multiyear, interdisciplinary effort will be a landmark accomplishment. In order to support this effort, I was one of the contributors to the structures sub-system, which was responsible for designing a rocket test stand at the time. This was intended to support data collection on a rocket provided by NASA's Johnson Space Center, which would form the basis for the future spacecraft's propulsion system.

Experiences: rocketry, testing procedures, space system design.